CYLINDER HEAD COVER

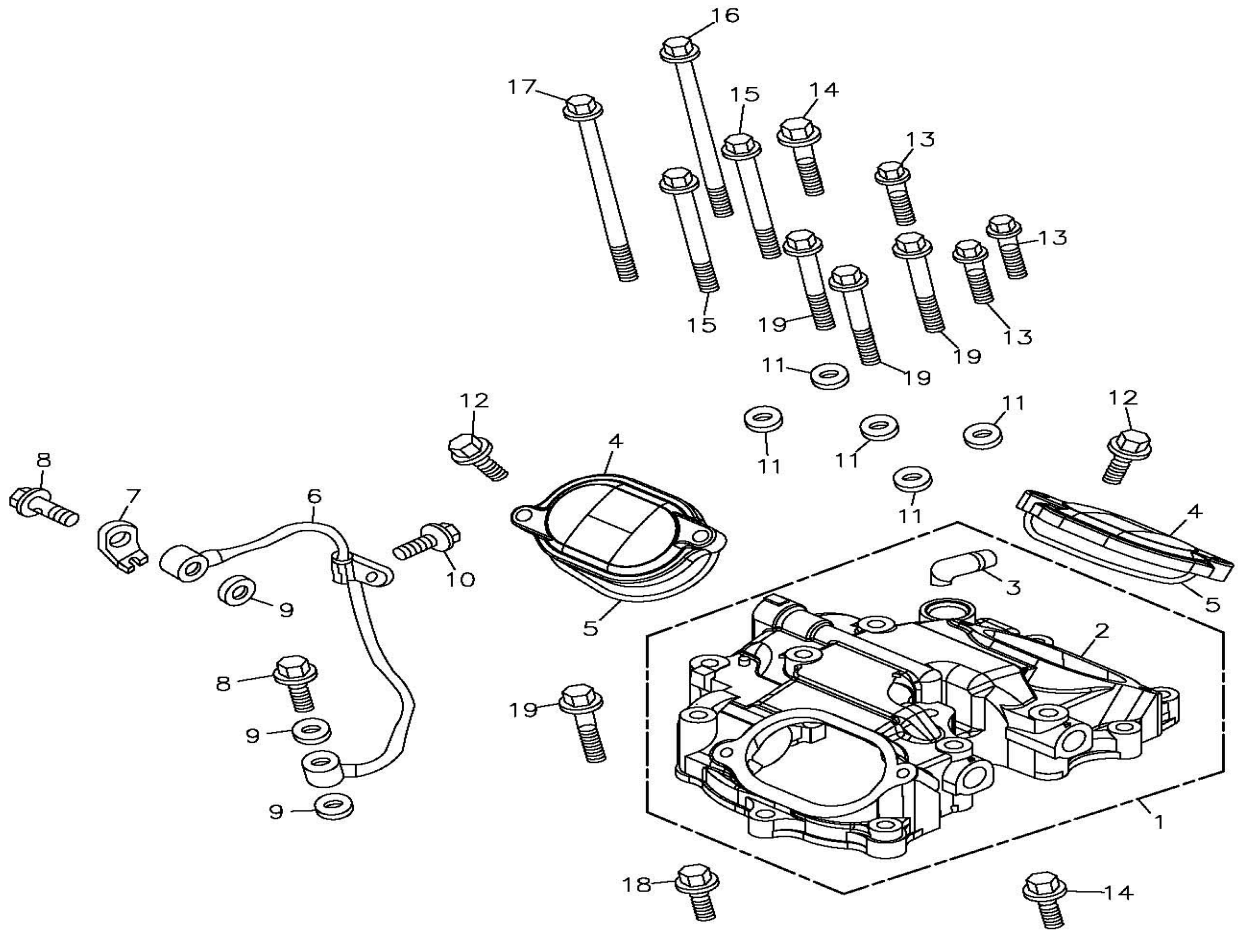

Item No.	Parts No.	Unit Q'ty	Parts Name	
1	12310-169-000	1	CYLINDER HEAD COVER ASS'Y	
2	12311-169-000	1	CYLINDER HEAD COVER	
3	11210-169-000	1	BREATHER TUBE	
4	12351-169-000	2	VALVE ADJUSTING COVER	
5	12393-169-000	2	COVER GASKET	
6	15201-169-000	1	OIL TUBE	
7	15207-169-000	1	TUBE BRACKET	
8	45456-169-000	2	OIL TUBE HEX BOLT	8*28
9	94103-0814010	3	COPPER PLAIN WASHER	8*14*1.0
10	96000-06012-10B	1	HEX FLANGE BOLT	6*12
11	94103-0714016	5	PLAIN WASHER	6.5*14*1.6
12	96000-06022-10B	4	HEX FLANGE BOLT	6*22
13	96000-06028-10B	3	HEX FLANGE BOLT	6*28
14	96000-06035-10B	2	HEX FLANGE BOLT	6*35
15	96000-06080-10B	2	HEX FLANGE BOLT	6*80
16	96000-06115-10B	1	HEX FLANGE BOLT	6*115
17	96000-06136-10B	1	HEX FLANGE BOLT	6*136
18	96000-06025-08B	1	HEX FLANGE BOLT	6*25

19	96004-06052-10B	4	HEX FLANGE BOLT	6*52

CYLINDER HEAD

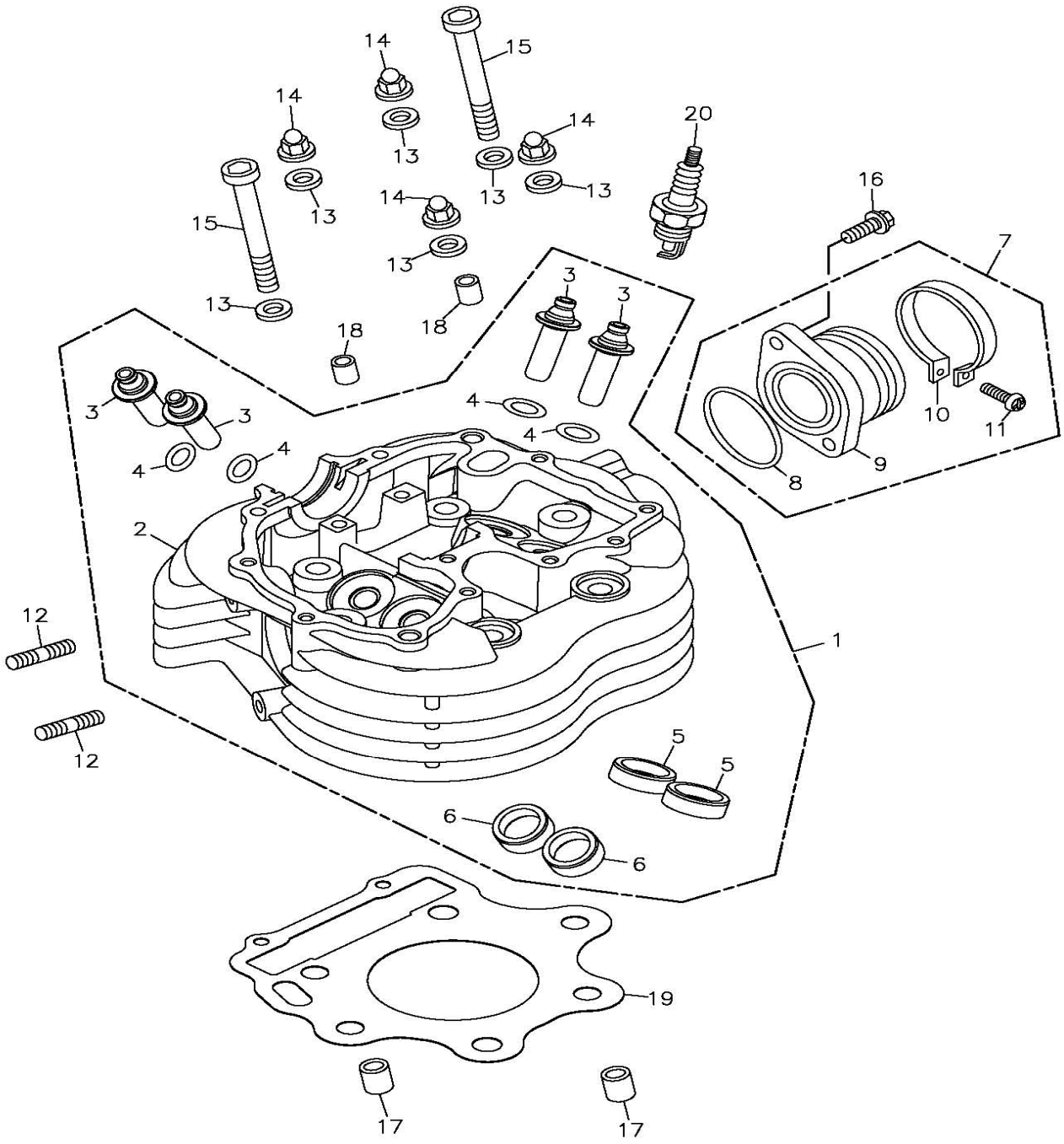

Item No.	Parts No.	Unit Q'ty	Parts Name	
1	12200-169-000	1	CYLINDER HEAD ASS'Y	
2	12201-169-000	1	CYLINDER HEAD	
3	12204-169-000	4	GUIDE VALVE	
4	91310-169-000	4	O-RING	10*2
5	14715-169-000	2	IN.VALVE SEAT	
6	14725-169-000	2	EX.VALVE SEAT	
7	17101-169-000	1	INTAKE MANIFOLD ASS'Y	
8	91336-169-000	1	OIL RING	36*3
9	17100-169-000	1	INTAKE MANIFOLD	
10	14111-169-000	1	INSULATOR BAND	

11	93500-05020K	1	PAN PHILLIPS BOLT	5*20
12	91001-08042B	2	STUD BOLT	8*42
13	94101-1020020	6	PLAIN WASHER	10*20*2
14	94031-10160	4	HEX ACORM WASHER FACE NUT	M10*P1.5
15	91000-10105B	2	HEX SOCKET BOLT	10*105*P1.25
16	96000-06022-08B	2	HEX FLANGE BOLT	6*22
17	94301-12200	2	DOWEL PIN	12*20
18	94301-08120	2	DOWEL PIN	8*12
19	12251-169-000	1	CYLINDER HEAD GASKET	
20	98076-108-00A	1	RESISTANCE SPARK PLUG	DR8EA

CAMSHAFT, VALVE

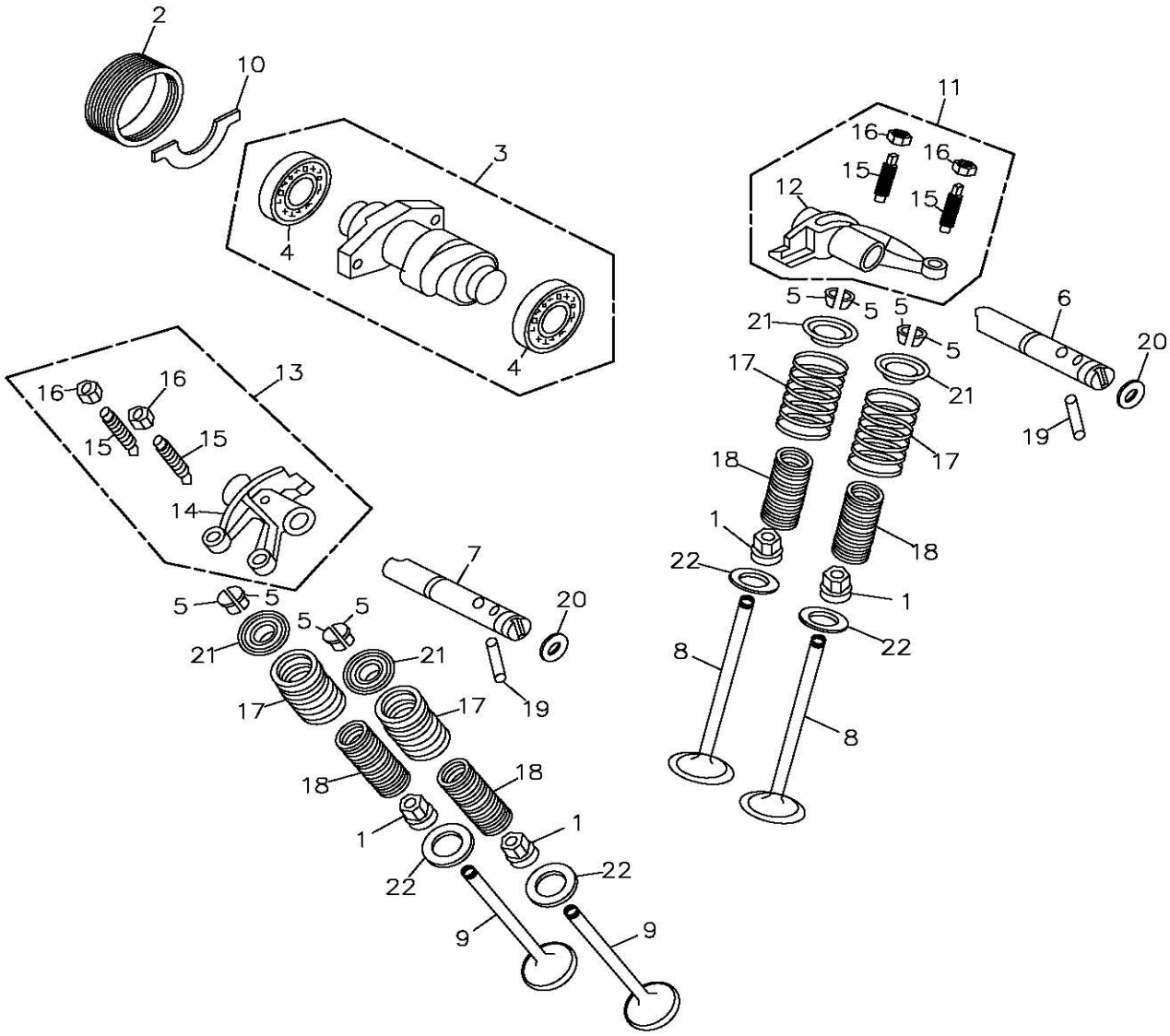

Item No.	Parts No.	Unit Q'ty	Parts Name	
1	12209-169-000	4	VALVE STEM SEAL	
2	12330-169-000	1	CYLINDER HEAD SIDE COVER	
3	14100-169-000	1	CAMSHAFT COMP	
4	96100-16003	2	RADIAL BALL BEARING	16003(NTN)
5	14781-169-000	8	VALVE COTTER	
6	14452-169-000	1	IN. ROCKER ARM SHAFT	
7	14453-169-000	1	EX. ROCKER ARM SHAFT	
8	14711-169-000	2	INLET VALVE	
9	14721-169-000	2	EXHAUST VALVE	
10	14456-169-000	1	STOPPER PLATE	
11	14433-169-000	1	INLET VALVE ARM ROCKER ASS'Y	
12	14431-169-000	1	INLET VALVE ARM ROCKER	
13	14434-169-000	1	EXHAUST VALVE ARM ROCKER ASS'Y	
14	14432-169-000	1	EXHAUST VALVE ARM ROCKER	
15	90012-169-000	4	VALVE GAP ADJUSTING SCREW	

16	90206-169-000	4	VALVE GAP ADJUSTING NUT	
17	14751-169-000	4	VALVE OUTER SPRING	
18	14761-169-000	4	VALVE INNER SPRING	
19	14455-169-000	2	DOWEL PIN	5*38
20	91307-169-000	2	OIL RING	7.7*2.5
21	14771-169-000	4	VALVE SPRING RETAINER	
22	14775-169-000	4	VALVE SPRING SEAT	20.8*28.6*1

CAM CHAIN TENSIONER

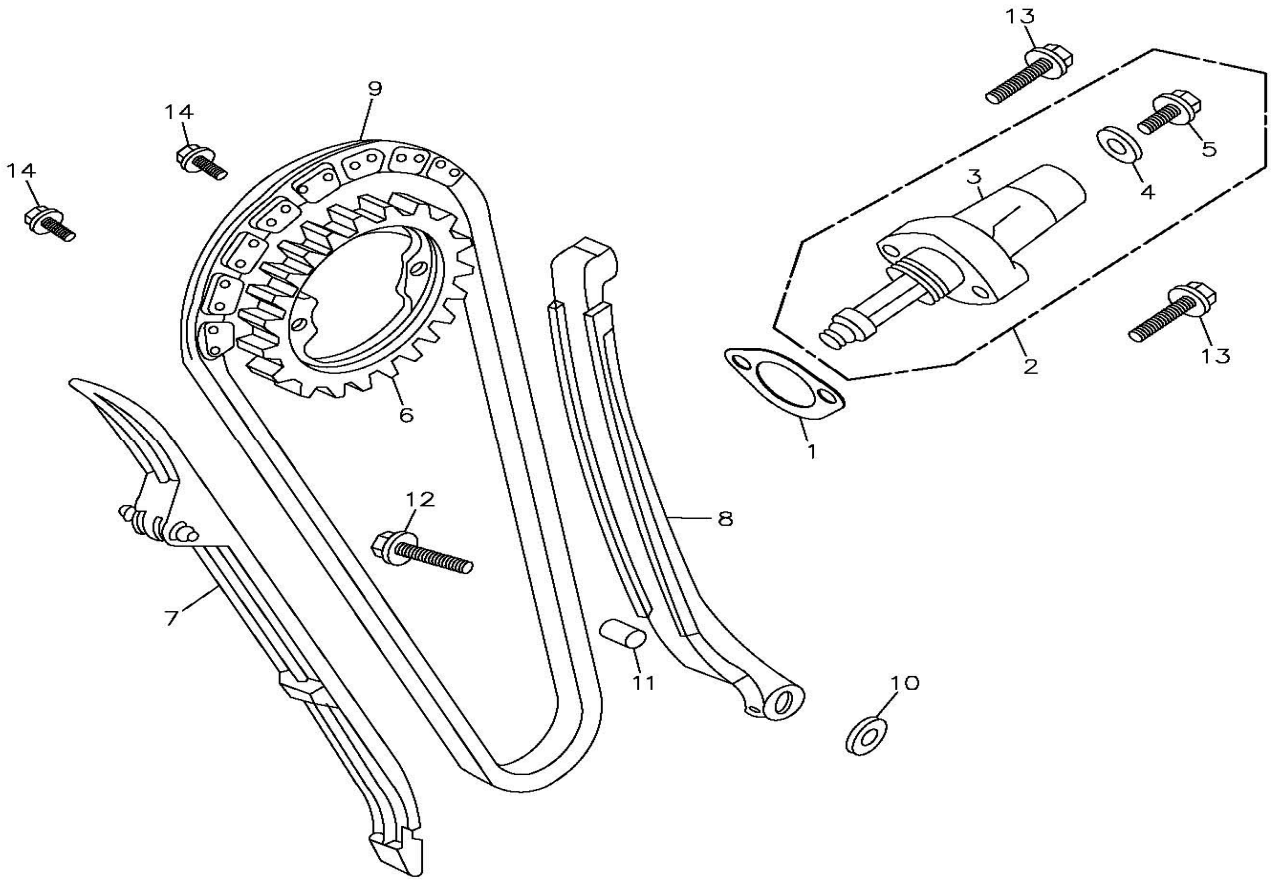

Item No.	Parts No.	Unit Q'ty	Parts Name	
1	14523-169-000	1	TENSIONER LIFTER GASKET	
2	14520-169-000	1	TENSIONER LIFTER ASS'Y	
3	14521-169-000	1	TENSIONER LIFTER BODY	
4	94101-0614010	1	PLAIN WASHER	6*14*1
5	96000-06013-08	1	HEX FLANGE BOLT	6*13
6	14321-169-000	1	CAMSHAFT SPROCKET	38T
7	14500-169-000	1	CAM CHAIN GUIDE COMP	
8	14550-169-000	1	CAM CHAIN TENSIONER	
9	14401-169-000	1	CAM CHAIN	
10	94101-0615010	1	PLAIN WASHER	6.5*15*1
11	14554-169-000	1	TENSIONER BUSH	6*10*9.2
12	96000-06025-10B	1	HEX FLANGE BOLT	6*25
13	96000-06025-08B	2	HEX FLANGE BOLT	6*25
14	96000-07011-10B	2	HEX FLANGE BOLT	7*11

CYLINDER

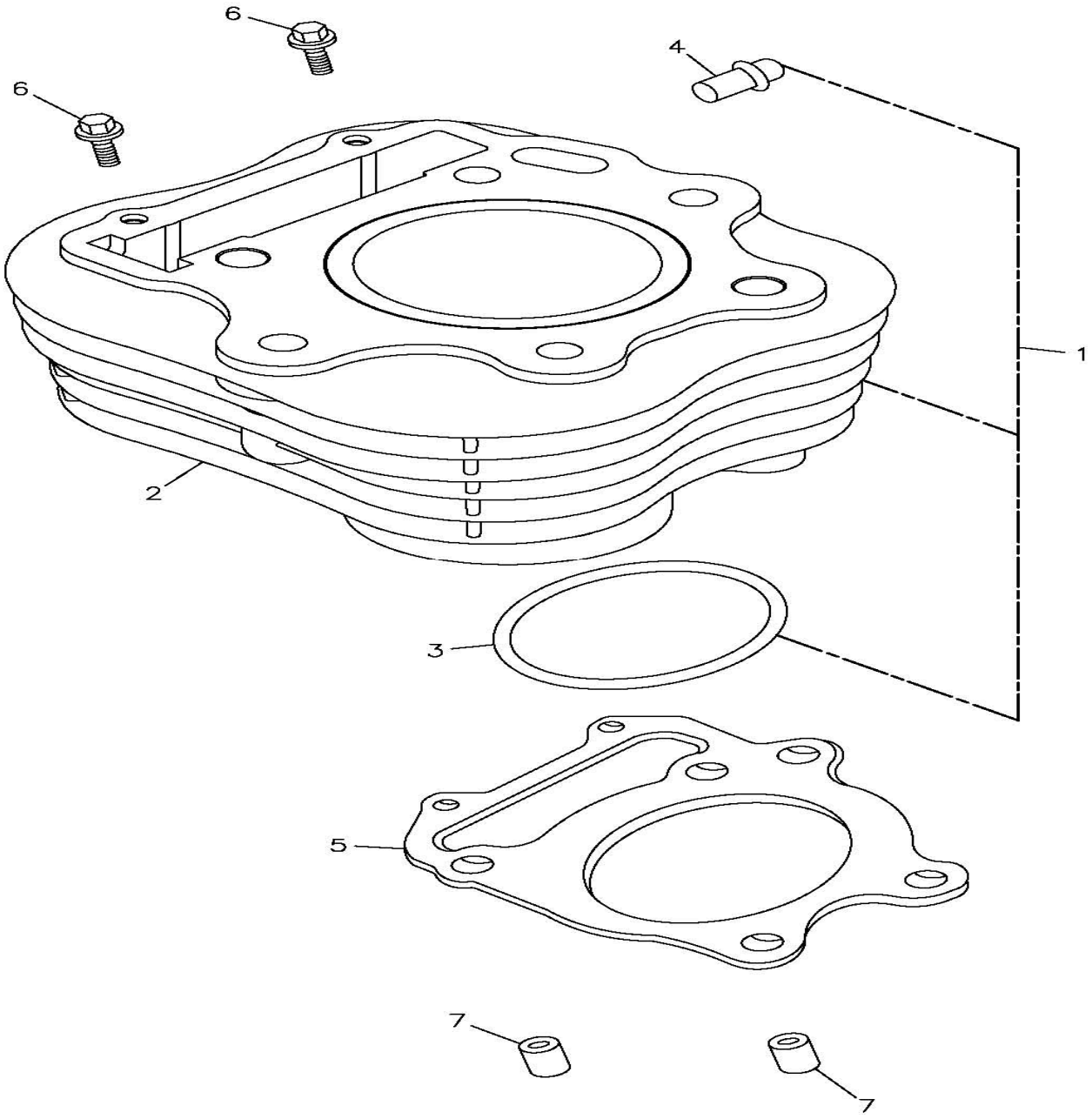

Item No.	Parts No.	Unit Q'ty	Parts Name	
1	12100-169-000	1	CYLINDER ASS'Y	
2	12101-169-000	1	CYLINDER	
3	91378-169-000	1	OIL RING	78.3*2
4	12102-169-000	1	BREATHER TUBE	
5	12191-169-000	1	CYLINDER GASKET	
6	96000-06028-08B	2	HEX FLANGE BOLT	6*28
7	94301-12200	2	DOWEL PIN	12*20

LEFT CRANKCASE COVER

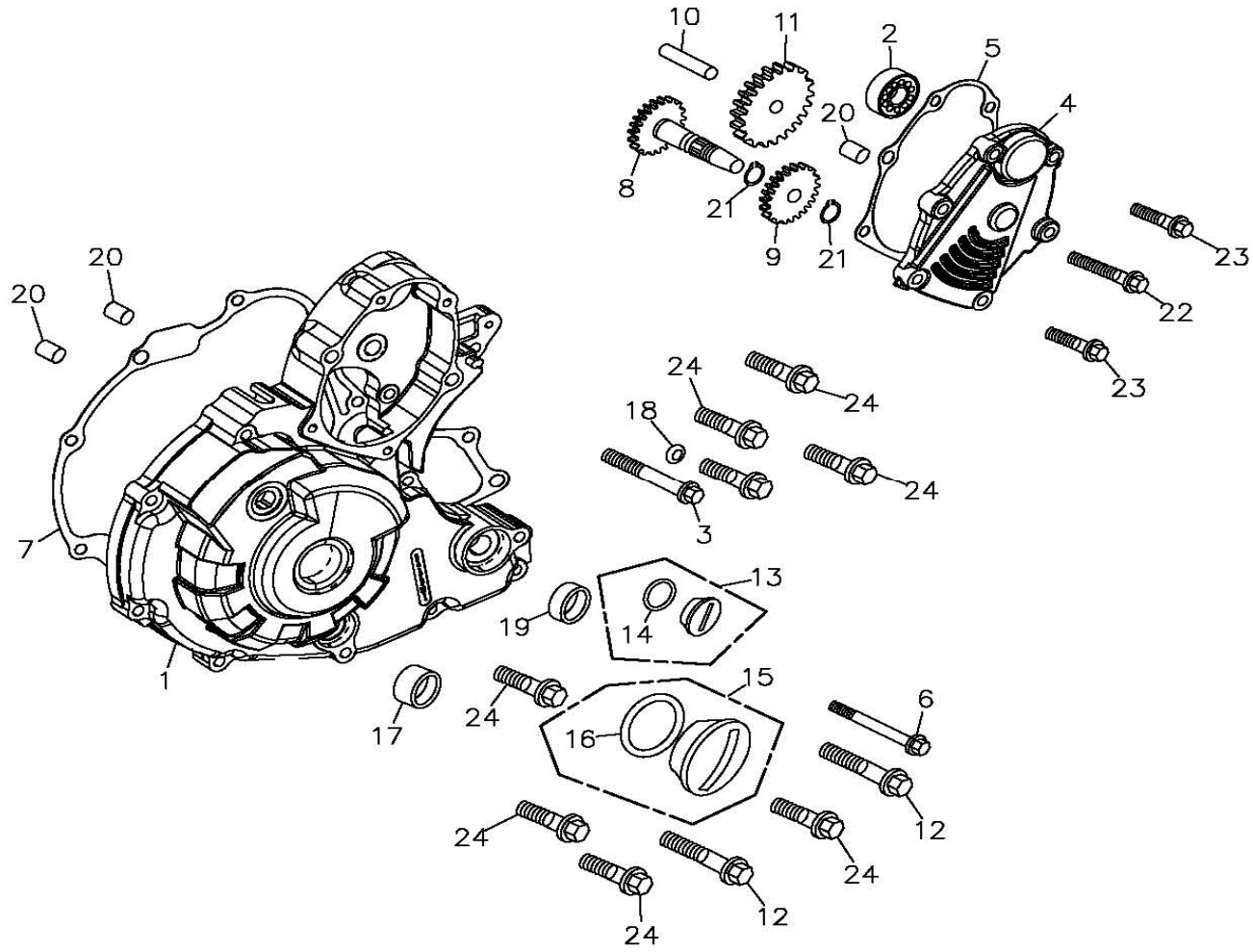

Item No.	Parts No.	Unit Q'ty	Parts Name		
1	11341-169-000	1	L,CRANK CASE COVER		
2	96100-60000	1	RADIAL BALL BEARING		6000
3	96000-06055-08B	1	HEX FLANGE BOLT	6*55	
4	11355-169-000	1	REDUCTION COVER		
5	11356-169-000	1	STARTER GEAR COVER GASKET		
6	96000-06045-08B	1	HEX FLANGE BOLT	6*45	
7	11359-169-000	1	GASKET L COVER		
8	28130-169-000	1	STARTER REDUCTION GEAR COMP	21T	
9	28131-169-000	1	STARTER REDUCTION GEAR	23T	
10	28132-169-000	1	STARTER REDUCTION GEAR SHAFT		
11	28140-169-000	1	STARTER REDUCTION GEAR COMP.	68/26T	
12	96000-06040-08B	2	HEX FLANGE BOLT	6*40	
13	90084-108-000	1	A.C.G. CAP	14mm	
14	91313-108-000	1	OIL RING	13.8*2.5	
15	90087-108-000	1	A.C.G. CAP	30mm	
16	91327-108-000	1	OIL-RING	27*2	
17	96500-12245	1	OIL SEAL	12*24*5	
18	94103-0712010	1	COPPER PLAIN WASHER	6.5*12*1	

19	96500-13287	1	OIL SEAL	13*28*7
20	94301-08140	4	DOWEL PIN	6.3*8*14
21	94511-1500S	2	EXTERNAL CIR CLIP	STW-15
22	96000-06032-08B	2	HEX FLANGE BOLT	6*32
23	96000-06025-08B	4	HEX FLANGE BOLT	6*25
24	96000-06028-08B	8	HEX FLANGE BOLT	6*28

RIGHT CRANKCASE COVER

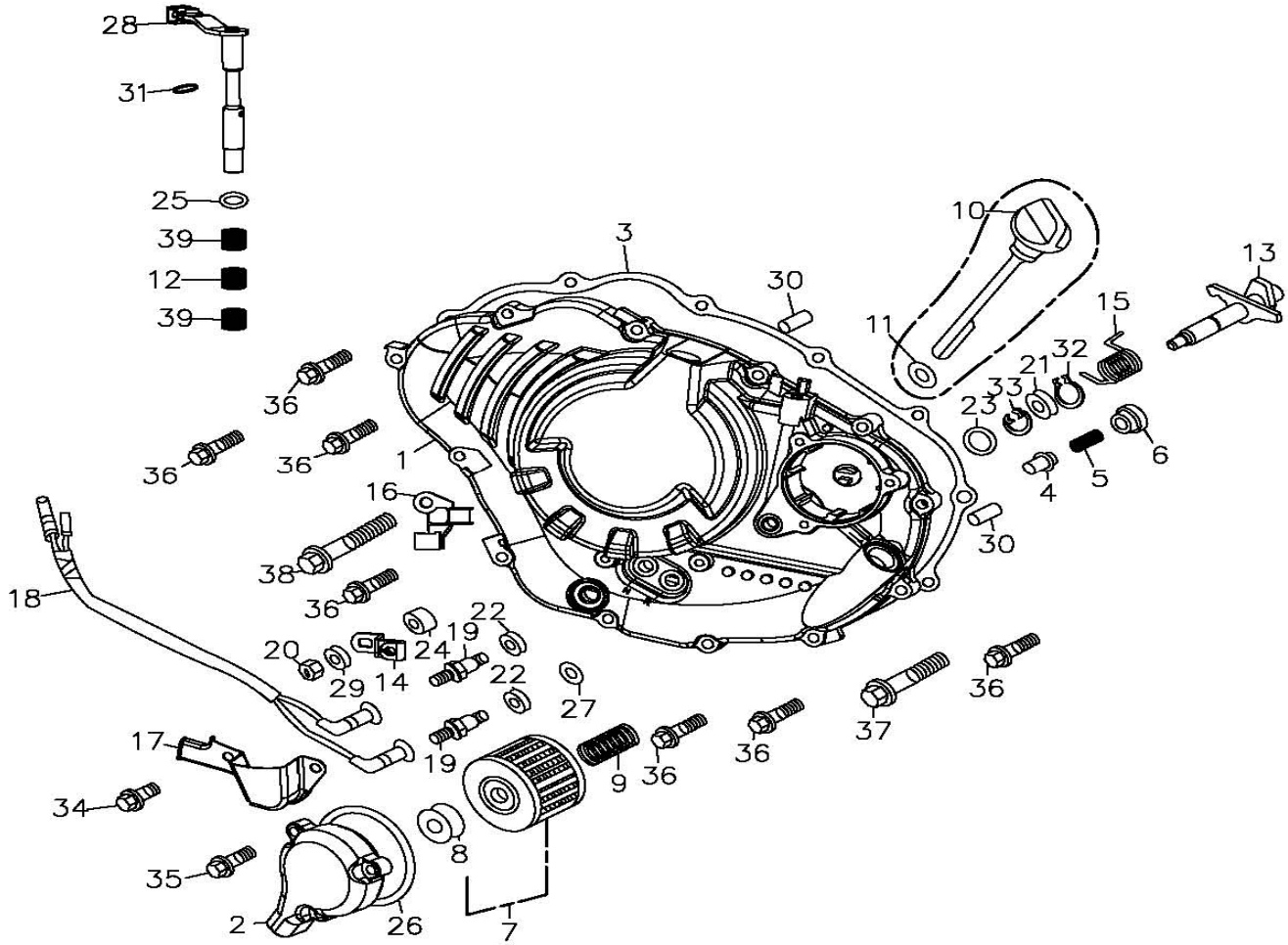

Item No.	Parts No.	Unit Q'ty	Parts Name	
1	11330-169-000	1	RIGHT CRANKCASE COVER	
2	11333-169-000	1	OIL FILTER COVER	
3	11393-169-000	1	GASKET R. CRANKCASE COVER	
4	15231-169-000	1	VALVE RELIEF	
5	15232-169-000	1	VALVE RELIEF SPRING	
6	15233-169-000	1	RELIEF VALEV CAP	14mm
7	15412-169-000	1	ELEMENT OIL FILTER	
8	15413-169-000	1	FILTER RUBBER	
9	15414-169-000	1	OIL FILTER ELEMENT SETTING SPRING	
10	1565A-120-000	1	OIL GAUGE ASS'Y	
11	91318-108-000	1	OIL RING	18*3
12	22815-169-000	1	CLUTCH LEVER SPRING	
13	24860-169-000	1	REVERSE STOPPER SHAFT COMP.	
14	24865-169-000	1	REVERSE STOPPER LEVER	
15	24867-169-000	1	REVERSE STOPPER SPRING	
16	24871-169-000	1	REVERSE STOPPER HOLDER	
17	24880-169-000	1	SWITCH COVER	
18	32102-169-000	1	SWITCH WIRE	

19	35750-169-000	2	NEUTRAL SWITCH CONTACT ASS'Y	
20	90351-06070	1	HEX FLANGE LOCK NUT	M6
21	94101-1017010	1	PLAIN WASHER	10*17*1
22	94103-1115013	2	COPPER PLAIN WASHER	10.5*15*1.3
23	96500-14225	1	OIL SEAL	14*22*5
24	96500-10205	1	OIL SEAL	10*20*5
25	96500-12185	1	OIL SEAL	12*18*5
26	91354-169-000	1	OIL RING	54*2.4
27	91311-169-000	1	OIL RING	11*1.9
28	22810-169-000	1	CLUTCH LEVER COMP.(REV.1)	
29	94101-0713010	1	PLAIN WASHER	6.5*13*1
30	94301-08140	2	DOWEL PIN	6.3*8*14
31	94305-03100	1	SPLIT SPRING PIN	3*10
32	94511-1000S	1	EXTERNAL CIR CLIP	STW-10
33	94512-2400R	1	INTERNAL CIR CLIP	RTW-24
34	96000-06012-08B	2	HEX FLANGE BOLT	6*12
35	96000-06022-08B	3	HEX FLANGE BOLT	6*22
36	96000-06032-08B	10	HEX FLANGE BOLT	6*32
37	96000-06040-08B	1	HEX FLANGE BOLT	6*40
38	96000-06050-08B	1	HEX FLANGE BOLT	6*50
39	96200-HK1210	2	NEEDLE BEARING	HK1210(NTN)

GENERATOR

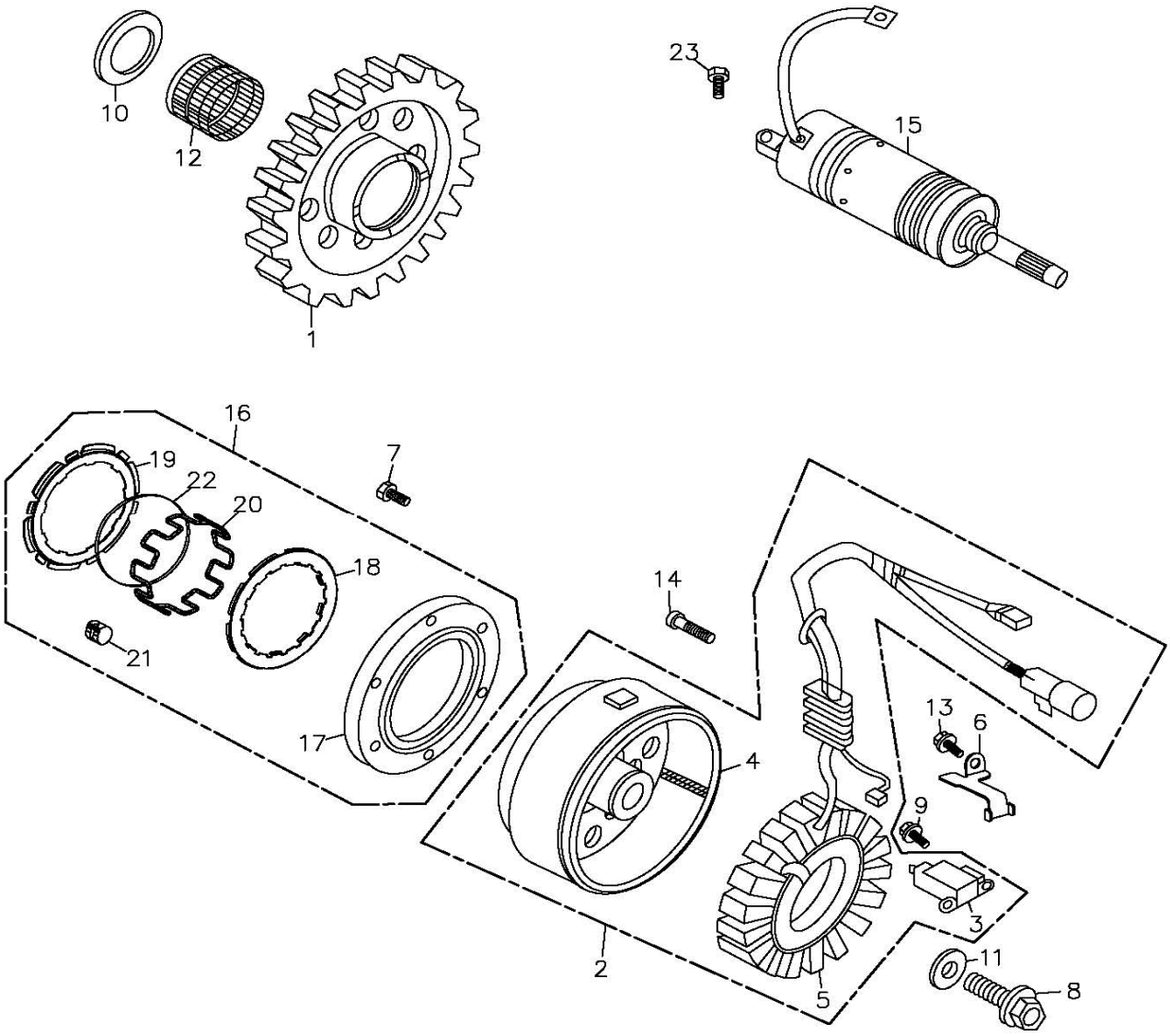

Item No.	Parts No.	Unit Q'ty	Parts Name	
1	28110-169-001	1	STARTER DRIVEN GEAR COMP	70T
2	31100-169-000	1	GENERATOR ASS'Y	
3	31124-169-000	1	PULSE ALTERNATOR COMP.	
4	31110-169-000	1	GENERATOR FLYWHEEL	
5	31120-169-000	1	STATOR COMP	
6	32961-169-000	1	WIRE CLAMPER	
7	91100-06020K	6	STAR SOCKET BOLT	6*20
8	96000-12045-17G	1	HEX FLANGE BOLT	12*45
9	91000-05014K	2	HEX SOCKET BOLT	5*14
10	94105-2740040	1	PLAIN WASHER	26.5*40*4
11	94101-1330042	1	PLAIN WASHER	12.5*30*4.2
12	96200-263124	1	NEEDLE BEARING	26*31*24
13	96000-06012-10B	1	HEX FLANGE BOLT	6*12
14	91000-06030B	3	HEX SOCKET BOLT	6*30

15	31200-169-000	1	STARTING MOTOR ASS'Y	
16	28410-169-001	1	STARTER CLUTCH ASS'Y	
17	28125-169-001	1	STARTING CLUTCH OUTER COMP.	
18	28126-169-000	1	UPPER STARTER PLATE	
19	28127-169-000	1	LOWER STARTER PLATE	
20	28128-169-000	1	SEPARATOR RING	
21	28129-169-000	18	ROLLER	
22	28124-169-000	1	SPRING	
23	96000-06025-10B	2	HEX FLANGE BOLT	6*25

OIL PUMP

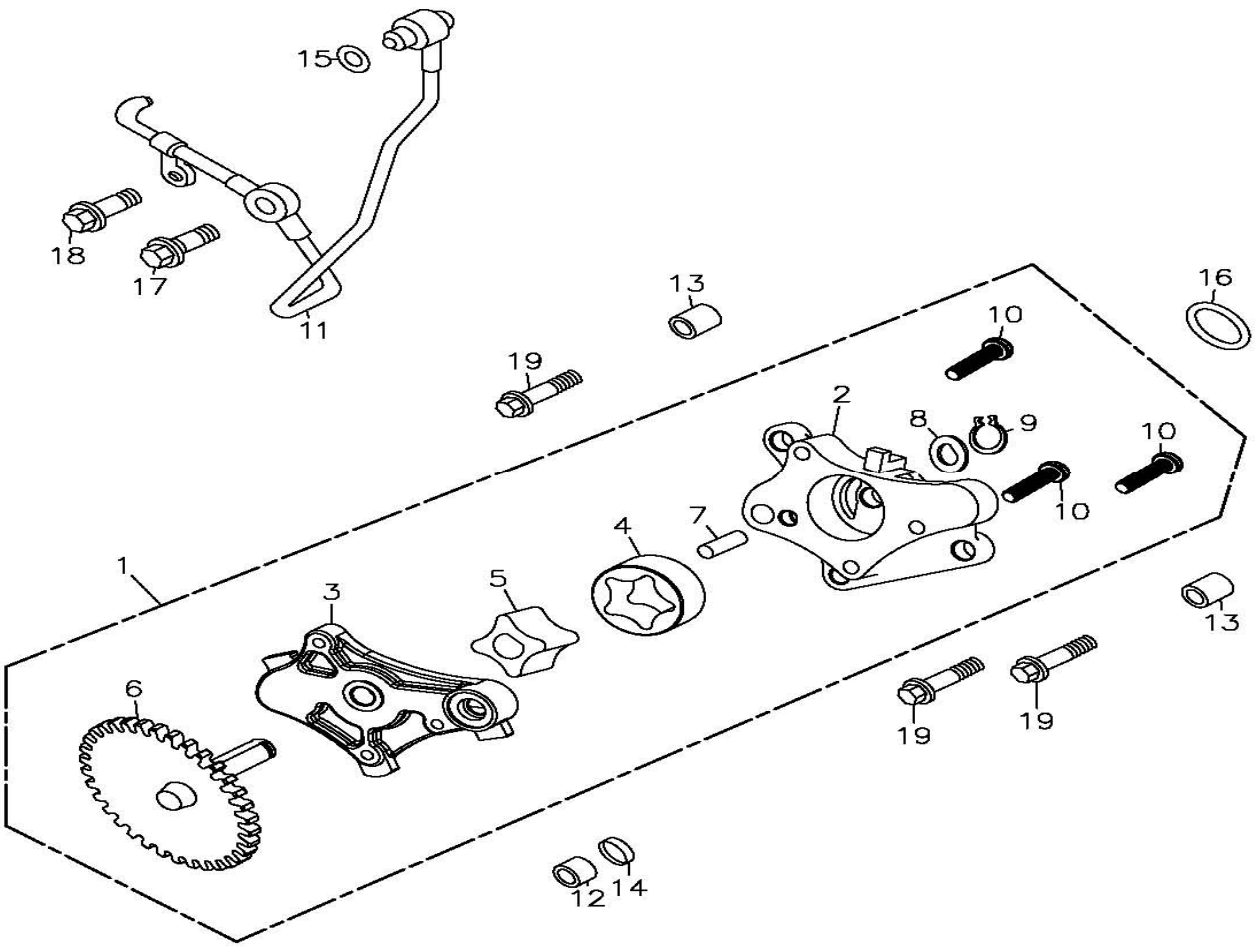

Item No.	Parts No.	Unit Q'ty	Parts Name	
1	15100-169-000	1	OIL PUMP ASS'Y	
2	15111-169-000	1	OIL PUMP BODY	
3	15116-169-000	1	OIL PUMP COVER	
4	15332-169-000	1	OIL PUMP OUTER ROTOR	
5	15331-169-000	1	OIL PUMP INNER ROTOR	
6	15150-169-000	1	OIL PUMP DRIVEN GEAR	34T
7	96300-060080	1	CRANK SHAFT PIN	6*8
8	15112-169-000	1	SHAFT WASHER	
9	94511-0800S	1	EXTERNAL CIRCLIP	STW-8
10	93500-05022B	3	PAN PHILLIPS BOLT	5*22
11	15101-169-000	1	OIL TANK TUBE	
12	94301-10100	1	DOWEL PIN	10*10
13	94301-08100	2	DOWEL PIN	8*10
14	91310-169-000	1	O-RING	10*2
15	91308-169-000	1	OIL RING	8*1.5
16	91317-179-000	1	OIL RING	17*2.5
17	15103-169-000	1	OIL TUBE FIXING BOLT	7*19
18	96000-06012-10B	1	HEX FLANGE BOLT	6*12
19	96000-06022-10B	3	HEX FLANGE BOLT	6*22

CLUTCH

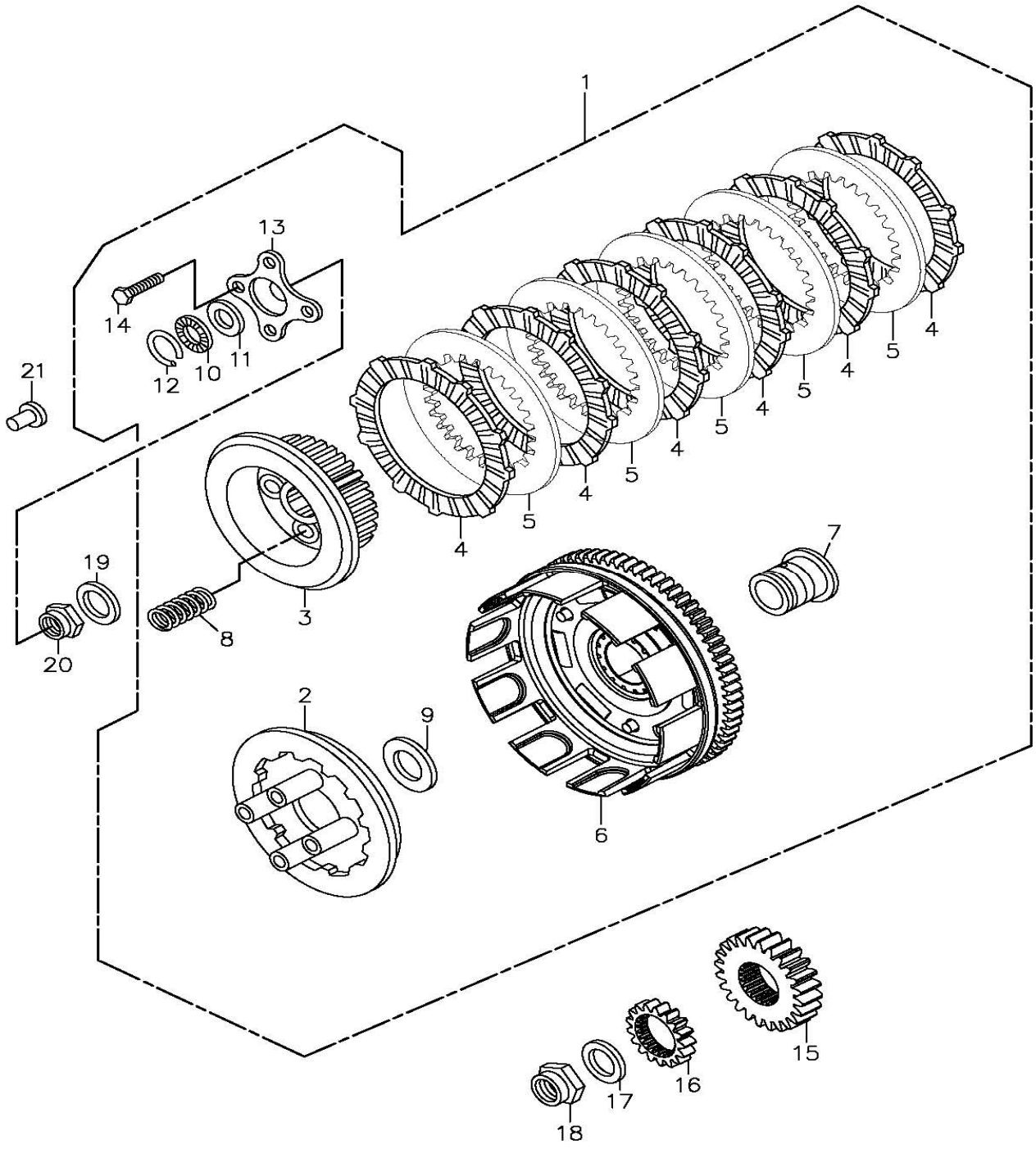

Item No.	Parts No.	Unit Q'ty	Parts Name	
1	22100-169-000	1	CLUTCH ASS'Y	
2	22350-169-000	1	CLUTCH PRESSURE PLATE	
3	22121-169-000	1	CLUTCH CENTER	
4	22201-169-000	6	CLUTCH FRICTION DISK	
5	22311-169-000	5	CLUTCH PLATE	
6	22110-169-000	1	CLUTCH COVER COMP ASS'Y	
7	22500-169-000	1	OIL BUSH	
8	22401-169-000	4	CLUTCH SPRING	
9	94101-2245008	1	PLAIN WASHER	22.3*45*0.8

10	96270-122602	1	NEEDLE BEARING	12*26*2
11	96271-169-000	1	THRUST WASHER	12*26*1
12	22362-169-000	1	CIR CLIP	
13	22361-169-000	1	CLUTCH LIFTER PLATE	
14	92000-06028-10K	4	HEX BOLT	6*28
15	23121-169-000	1	PRIMARY DRIVE GEAR	24T
16	15131-169-000	1	OIL PUMP DRIVER GEAR	17T
17	94113-2130022	1	DISC SPRING WASHER	20.5*29.5*2.2
18	93961-20100L	1	LOCK NUT(LEFT THREAD)	M20
19	94113-1928020	1	DISC SPRING WASHER	18.5*28*2
20	93960-18090	1	LOCK NUT	M18
21	22366-169-000	1	CLUTCH LIFTER GUIDE PIN	

CRANKCASE

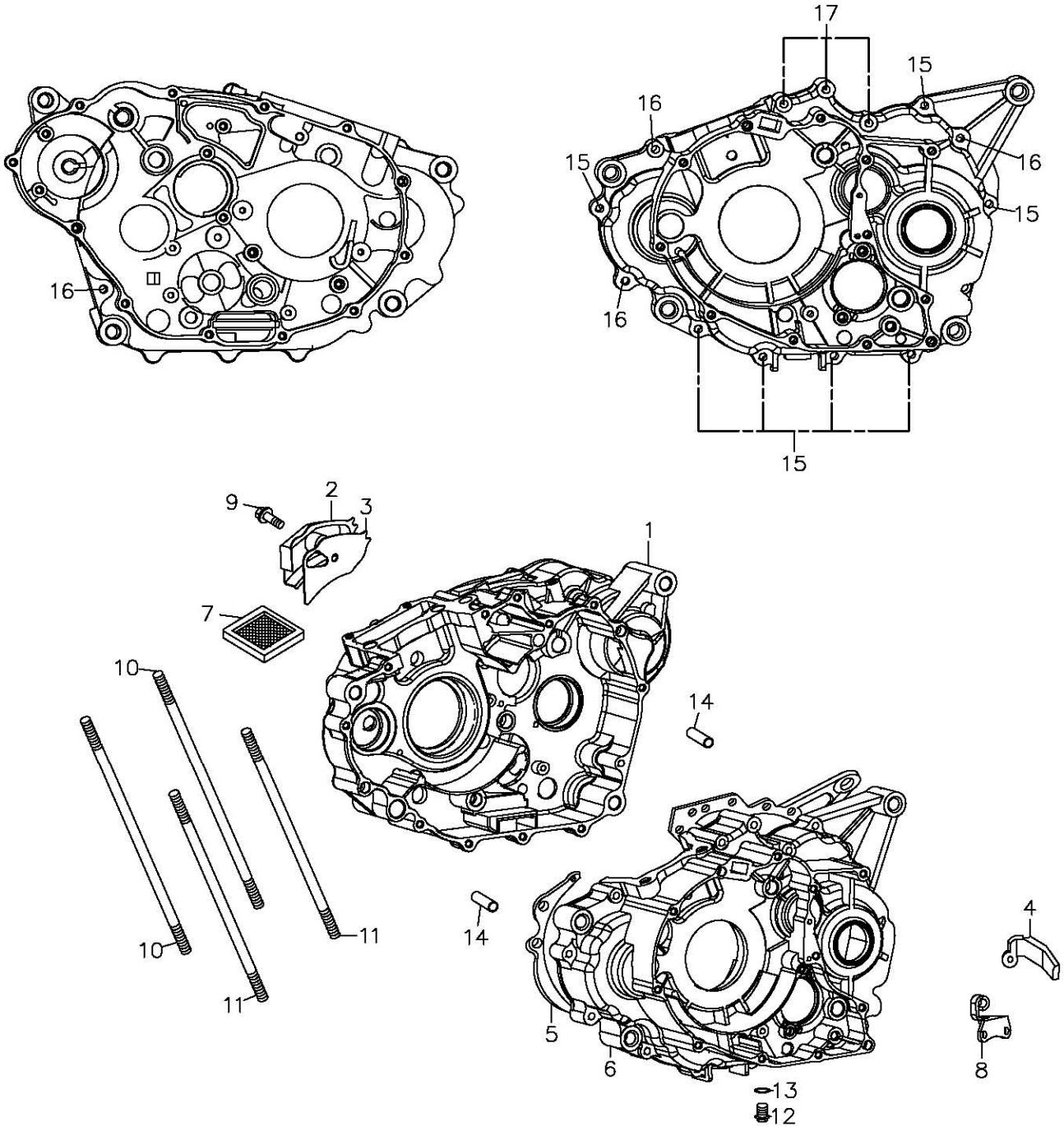

Item No.	Parts No.	Unit Q'ty	Parts Name	
1	11101-169-000	1	RIGHT CRANKCASE	
2	11342-169-000	1	BREATHER PLATE	
3	11346-169-000	1	BREATHER PLATE GASKET	
4	11384-169-000	1	BREATHER TUBE CLAMP	
5	11191-169-000	1	CRANKCASE GASKET	
6	11201-169-000	1	L.CRANK CASE COMP	
7	15421-169-000	1	OIL FILTER SCREEN	
8	22838-169-000	1	CLUTCH WIRE RECEIVER	
9	91300-06012B	1	HEX SOCKET FLANGE BOLT	6*12
10	91001-10192	2	STUD BOLT	10*192

11	91001-10184	2	STUD BOLT	10*184
12	96000-12015-17B	1	HEX FLANGE BOLT	12*15
13	94104-1320020	1	PLAIN WASHER	12.5*20*2
14	94301-10160	2	DOWEL PIN	10*16
15	96000-06035-10B	7	HEX FLANGE BOLT	6*35
16	96000-06045-10B	4	HEX FLANGE BOLT	6*45
17	96000-06065-10B	3	HEX FLANGE BOLT	6*65

CRANK SHAFT PISTON

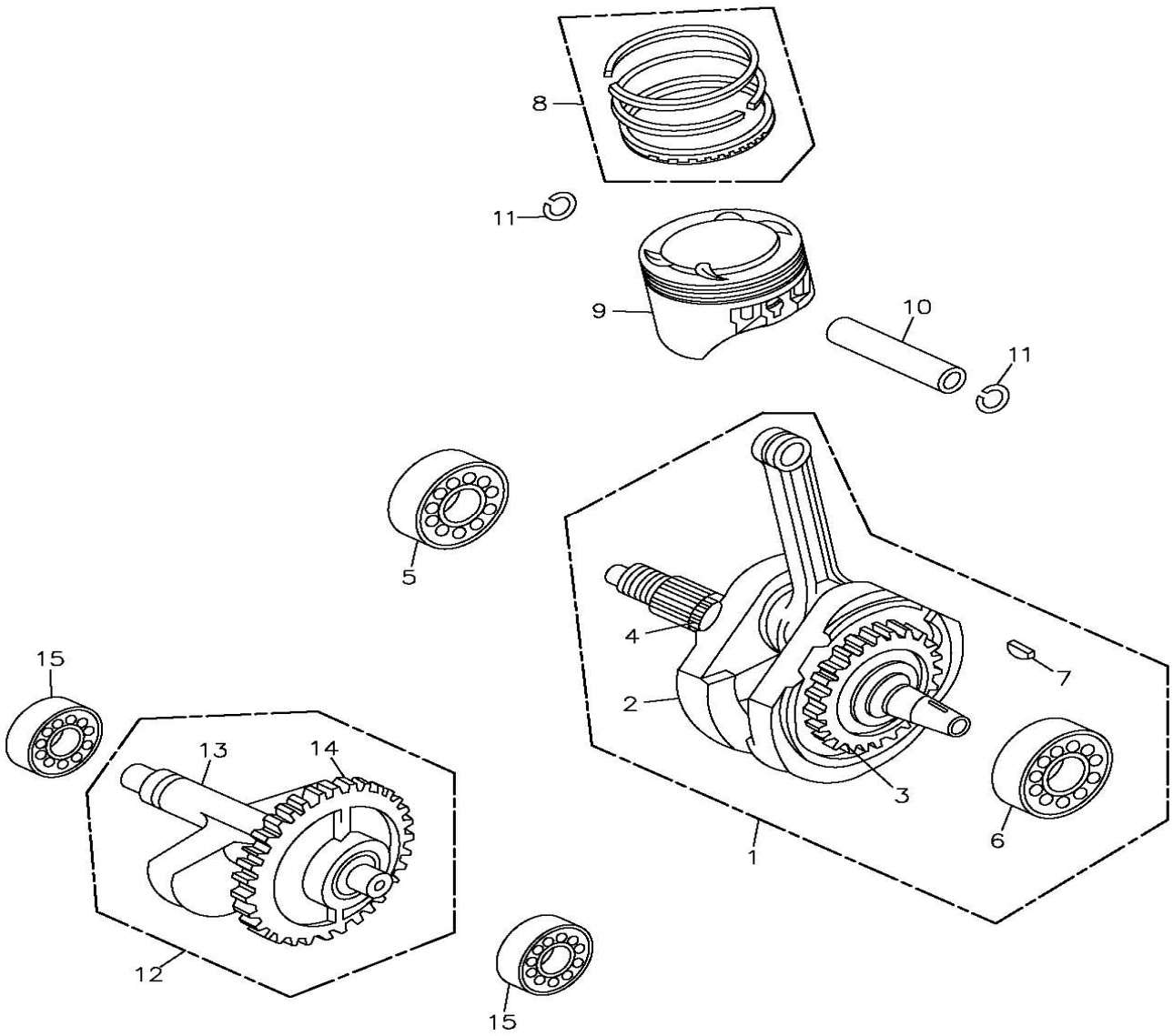

Item No.	Parts No.	Unit Q'ty	Parts Name	
1	13000-169-000	1	CRANKSHAFT ASS'Y	
2	13001-169-000	1	CRANK SHAFT	
3	13002-169-000	1	CRANK SHAFT GEAR	34T
4	14311-169-000	1	TIMING SPROCKET	19T
5	96100-TMB208	1	RADIAL BALL BEARING FRONT WH	TMB208CC3(NTN)
6	96100-TMSC0693	1	RADIAL BALL BEARING FRONT WH	TM-SC0693CS20
7	90471-169-000	1	SEMICYCLE KEY	24*14*4
8	13011-169-000	1	PISTON RING SET	
9	13100-169-000	1	PISTON	
10	13111-169-000	1	PISTON PIN	
11	13115-169-000	2	CLIP PISTON PIN	
12	13420-169-000	1	SHAFT COMP ASS'Y	
13	13421-169-000	1	SHAFT COMP	
14	13422-169-000	1	SHAFT COMP GEAR	34T
15	96100-TMB203A	2	RADIAL BALL BEARING	TMB203AJR2C3/2A

TRANSMISSION

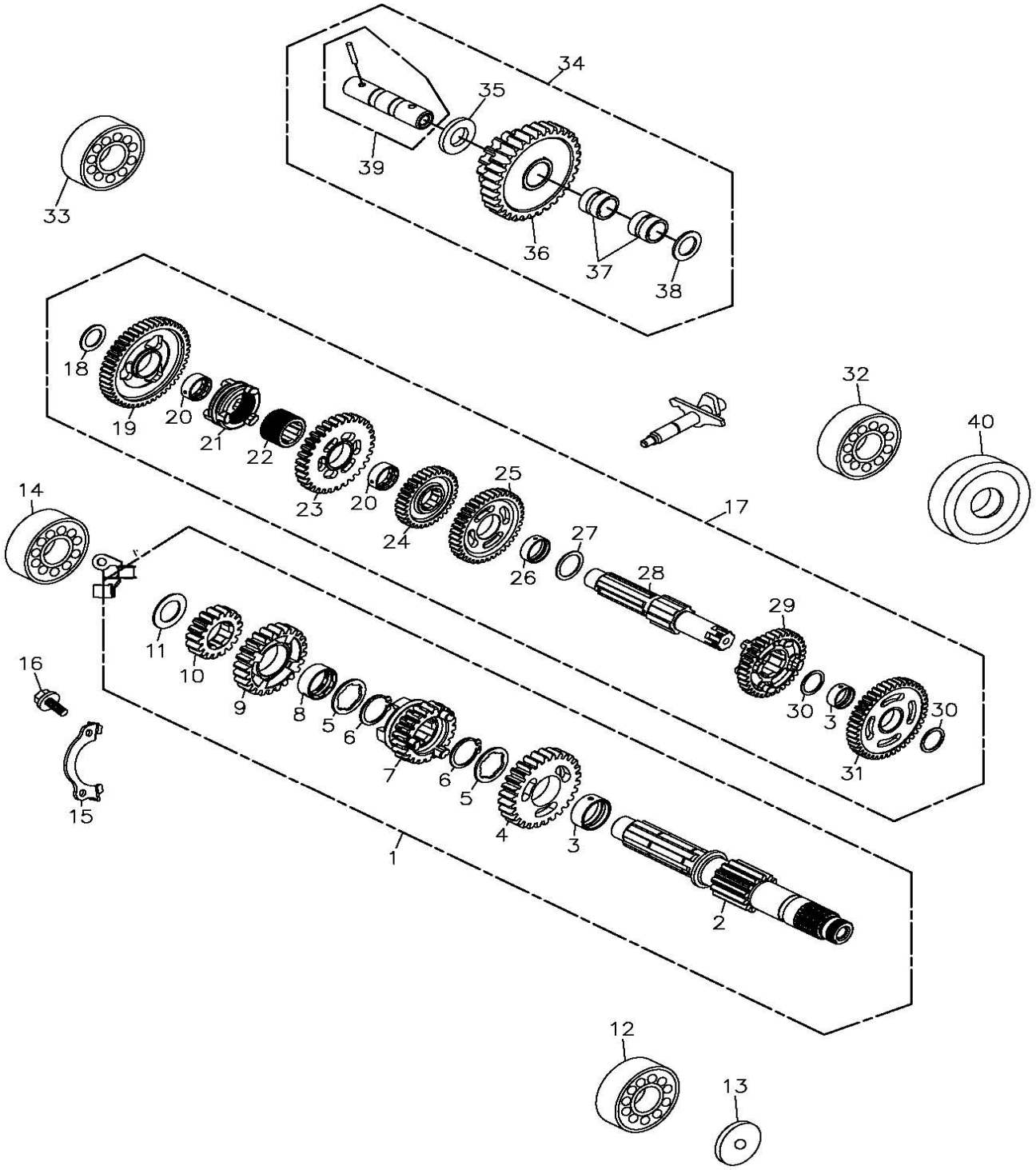

Item No.	Parts No.	Unit Q'ty	Parts Name	
1	23212-169-000	1	MAIN SHAFT ASS'Y	
2	23211-169-000	1	MAIN SHAFT	13T
3	91004-169-000	2	BUSH	22*25*10
4	23501-169-000	1	M-5 GEAR	28T
5	90455-2028015	2	SOLINE WASHER	20*28*1.5
6	94511-2200G	2	CIRCLIP	GTW-22
7	23461-169-000	1	M-3 GEAL	21T
8	91008-169-000	1	SPLINE BUSH	22*25*9.5

9	23481-169-000	1	M-4 GEAL	24T
10	23441-169-000	1	M-2 GEAL	17T
11	90452-169-000	1	THRUST WASHER	17*28*1
12	96100-TMB203A	1	RADIAL BALL BEARING	TMB203AJR2C3/2A
13	11103-169-000	1	OIL GUIDE	
14	96100-TMB222	1	RADIAL BALL BEARING	TMB2/22CCS15
15	94601-169-000	1	BEARING SETTING PLATE	
16	91000-06016B	2	HEX SOCKET BOLT	6*16
17	23222-169-000	1	COUNTER SHAFT ASS'Y	
18	90451-2030015	1	THRUST WASHER	20*30*1.5
19	23421-169-000	1	C-1 GEAR COMP	48T
20	91006-169-000	2	BUSH, REVERSE GARE	
21	24781-169-000	1	SHIFTER, REVERSE COUNTERHAFT LOW GEAR	
22	24780-169-000	1	COLLAR SPLINE	
23	24776-169-000	1	COUNTERSHAFT REVERSE GEAR	32T
24	23511-169-000	1	C-5 GEAR	33T
25	23471-169-000	1	C-3 GEAR	39T
26	91005-169-000	1	COUNTERSHAFT THIRD BUSH	
27	90451-2533010	1	THRUST WASHER	25.3*33*1
28	23221-169-000	1	COUNTER SHAFT	
29	23491-169-000	1	C-4 GEAR	35T
30	90451-2228010	2	THRUST WASHER	22.3*28*1
31	23451-169-000	1	C-2 GEAR	43T
32	96100-TMB322	1	RADIAL BALL BEARING	TMB3/22JR2CS29
33	96100-62040	1	RADIAL BALL BEARING	6204C3
34	24773-169-000	1	REVERSE IDLE GEAR ASS'Y	
35	90451-1426032	1	THRUST WASHER	14.3*26.7*3.2
36	24775-169-000	1	REVERSE IDLE GEAR	15/33T
37	24774-169-000	2	REVERSE IDLE GEAR BUSH	
38	90451-1422015	1	THRUST WASHER	14.3*22*1.5
39	24770-169-000	1	REVERSE IDLE GEAR SHAFT	
40	96500-22366	1	OIL SEAL	22*36*6

GEAR SHIFT

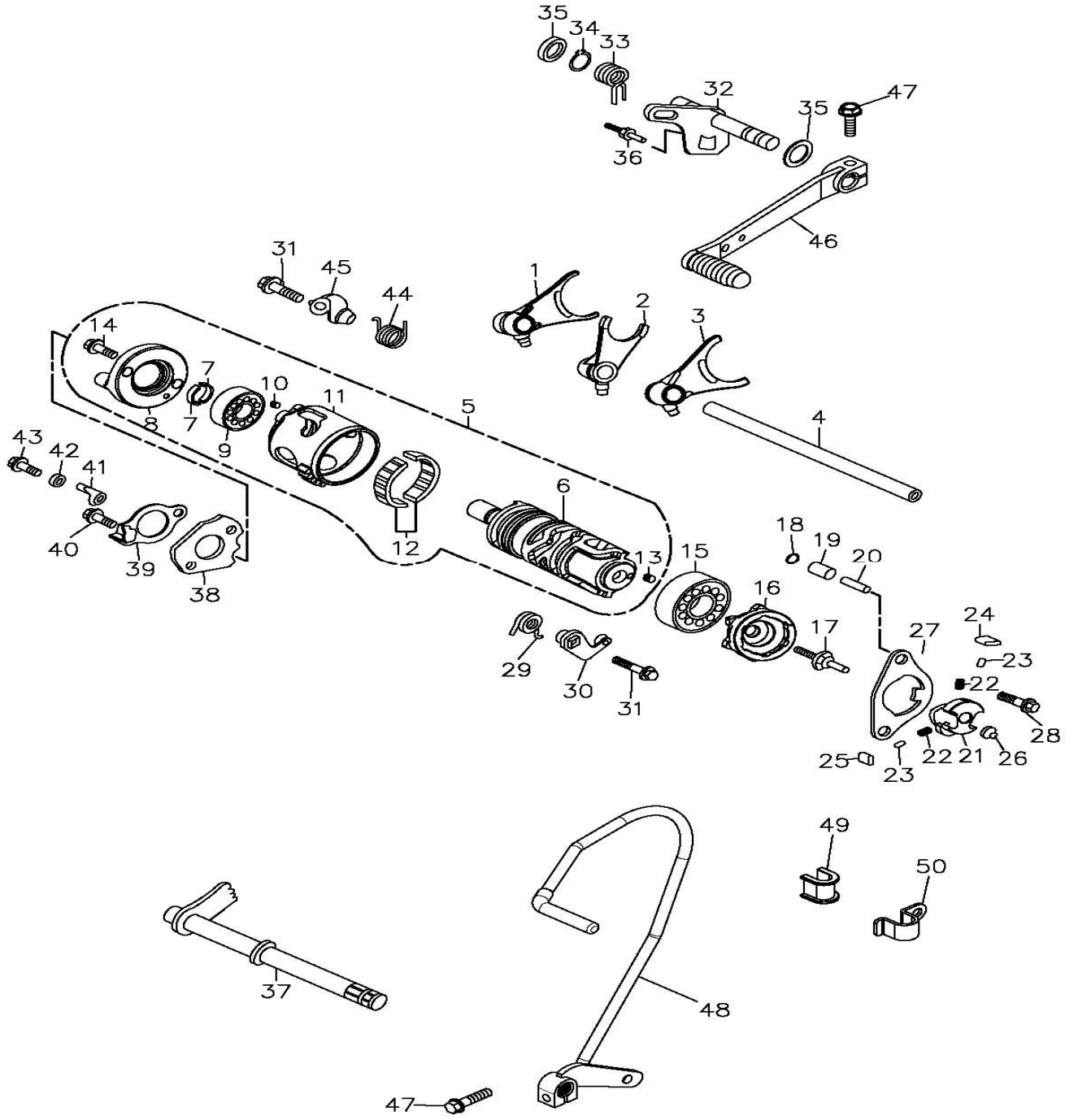

Item No.	Parts No.	Unit Q'ty	Parts Name	
1	24211-169-000	1	R.GEAR SHIFT FORK	
2	24231-169-000	1	CENTER GEAR SHIFT FORK	
3	24212-169-000	1	L.GEAR SHIFT FORK	
4	24241-169-000	1	GEAR SHIFT FORK GUIDE SHAFT	
5	24300-169-000	1	GEAR SHIFT DRUM ASS'Y	
6	24301-169-000	1	GEAR SHIFT DRUM	
7	24302-169-000	2	SEPSRATE RING	
8	24304-169-000	1	BEARING HOLDER	
9	96100-69020	1	RADIAL BALL BEARING	6902(NTN)
10	96220-30085	1	ROLLER	3*8.5

11	24303-169-000	1	REVERSE GEAR SHAFT DRUM	
12	96250-374313	1	NEEDLE BEARING	37*43*13
13	96220-40080	1	COLLER	4*8
14	91000-06014K	2	HEX SOCKET BOLT	6*14
15	96100-16005	1	RADIAL BALL BEARING	16005(KOYO)
16	24411-169-000	1	SHIFT DRUM CENTER	
17	24412-169-000	1	SHIFTER PIN	
18	24420-169-000	2	BEARING HOLDER PLATE	
19	96401-081417	2	BUSHING	8.5*13.7*17.2
20	94301-08265	2	DOWEL PIN	8*26.5
21	24413-169-000	1	DRUM SHIFTER	
22	24417-169-000	2	PLUNGER SPRING	
23	24418-169-000	2	PLUNGER	
24	24416-169-000	1	PAWL A	
25	24415-169-000	1	PAWL B	
26	24414-169-000	1	SHIFTER COLLAR	
27	24419-169-000	1	GUIDE PLATE	
28	96000-06040-10B	2	HEX FLANGE BOLT	6*40
29	24435-169-000	1	SHIFT DRUM STOPPER SPRING	
30	24430-169-000	1	GEAR SHIFT DRUM STOPPER COMP	
31	96000-06032-10B	2	HEX FLANGE BOLT	6*32
32	24630-169-000	1	GEAR SHIFT ARM	
33	24651-169-000	1	GEAR SHIFT RETURN SPRING	
34	94511-1200S	1	EXTERNAL CIR CLIP	STW-12
35	94101-1321015	2	PLAIN WASHER	13*21*1.5
36	24652-169-000	1	GEAR SHIFT RETURN SPRING PIN	
37	24610-169-000	1	GEAR SHIFT SPINDLE COMP	
38	24433-169-000	1	REVERSE STOPPER CAM	
39	24434-169-000	1	REVERSE SWITCH ROTOR	
40	96000-06015-10G	2	HEX WASHER FACE BOLT	6*15
41	24436-169-000	1	NEUTRAL SWITCH ROTOR	
42	94101-0711010	1	PLAIN WASHER	6.5*11*1
43	91000-06016K	1	HEX SOCKET BOLT	6*16
44	24432-169-000	1	REVERSE SHIFT DRUM STOPPER SPRING	
45	24431-169-000	1	REVERSE SHIFT STOPPER COMP	
46	24700-169-000	1	GEAR CHANGE PEDAL ASS'Y	
47	96000-06020-10G	2	HEX FLANGE BOLT	M6*20
48	24950-223-000	1	REVERSE SHIFT LEVER	
49	24804-169-000	1	CLIP PAD	
50	24803-169-000	1	CLIP	

HANDLE BAR

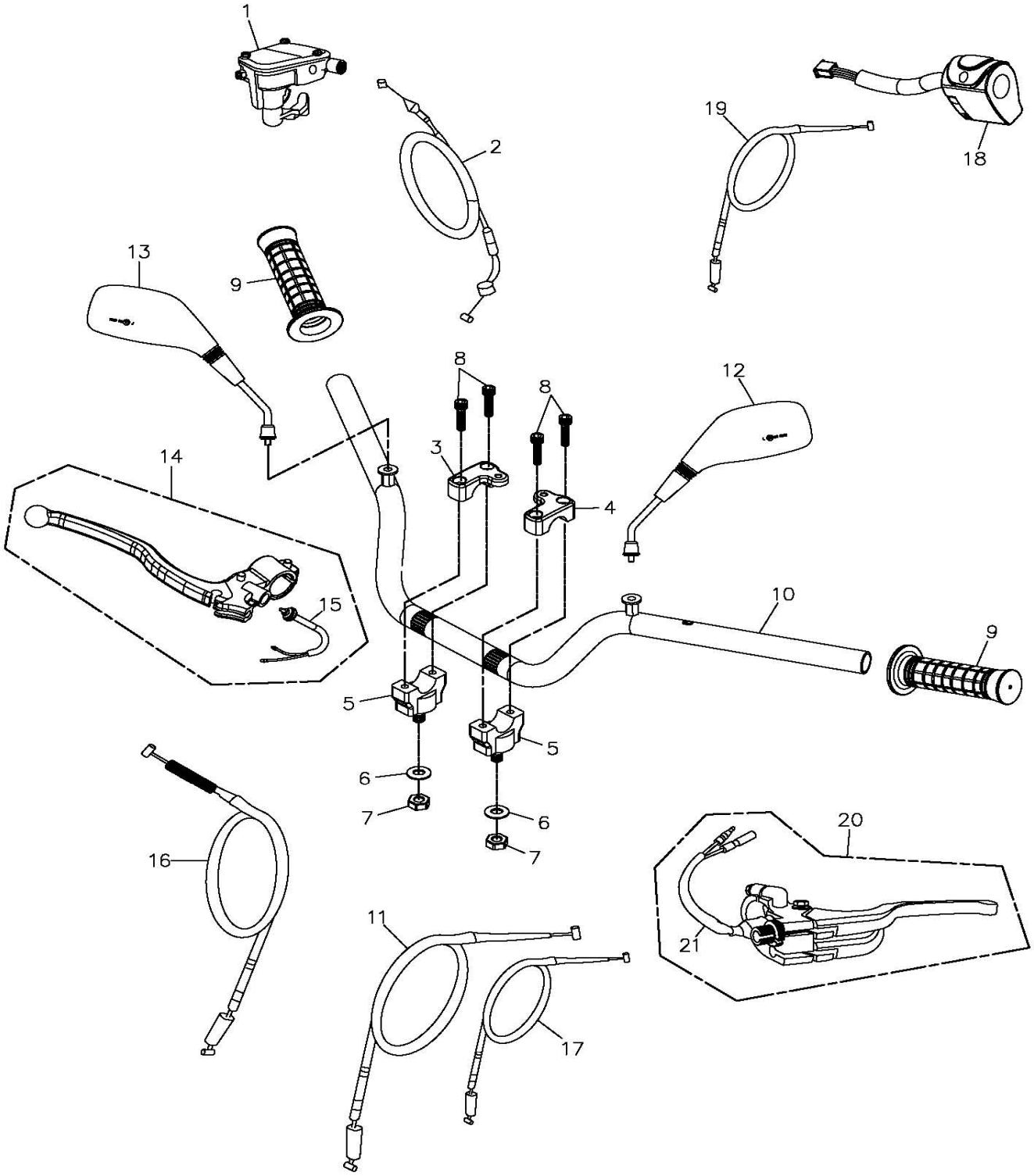

Item No.	Parts No.	Unit Q'ty	Parts Name	
1	53170-169-000	1	RIGHT LEVER ASS'Y	
2	17910-169-000	1	THROTTLE CABLE	
3	53103-145-000	1	RIGHT HANDLE BAR CLAMP	
4	53102-145-000	1	LEFT HANDLE BAR CLAMP	
5	53101-154-000	2	HANDLE BAR BOTTOM CLAMP	
6	94105-1022025G	2	PLAIN WASHER	10*22*2.5
7	90350-10000G	2	NYLON NUT	M10*P1.25

8	91000-06025	4	HEX SOCKET BOLT	6*25
9	53165-179-000	2	HANDLE BAR GRIP	
10	53100-223-000	1	HANDLE BAR	
11	22870-169-000	1	CLUTCH CABLE	
12	88120-145-000	1	L.REAR VIEW MIRROR	
13	88110-145-000	1	R.REAR VIEW MIRROR	
14	53170-169-00A	1	RIGHT LEVER ASS'Y	5EA5-RR
15	35340-169-000	1	R.BRAKE SWITCH WIRE	
16	43470-169-000	1	FOOT BRAKE CABLE	
17	43480-169-000	1	REVERSE CABLE A	
18	35200-169-00A	1	L.HANDLE SWITCH ASS'Y	
19	17950-169-000	1	CHOCK CABLE	
20	53179-169-000	1	LEFT LEVER	
21	35345-169-000	1	L.CLUTCH SWITCH WIRE	

STEERING

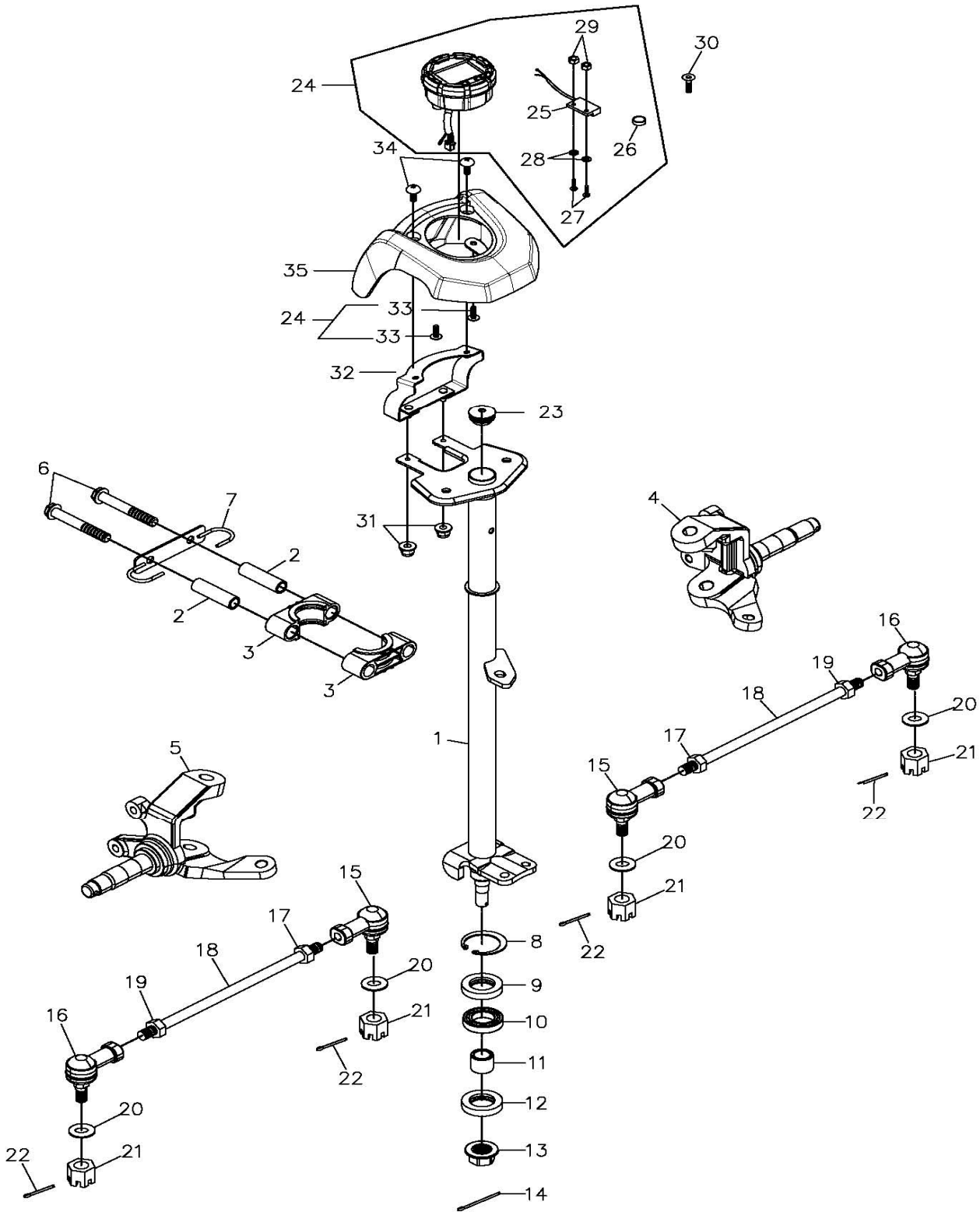

Item No.	Parts No.	Unit Q'ty	Parts Name	
1	51109-197-000	1	STEERING SHAFT ASS'Y	
2	51114-169-000	2	HOLDER SPACER COLLER	
3	51113-169-000	2	STEERING SHAFT HOLDER	
4	44520-169-000	1	RIGHT KNUCKLE ASS'Y	
5	44510-169-000	1	LEFT KNUCKLE ASS'Y	
6	96000-10065-12G	2	HEX WASHER FACE BOLT	10*65

7	45451-197-000	1	BRACKET	
8	94512-4000R	1	INTERNAL CIR CLIP	RTW-40
9	96500-274008	1	OIL SEAL	27*40*8
10	96100-6203ZZ	1	RADIAL BALL BEARING	6203ZZCS05/2A
11	51120-169-000	1	STEERING SHAFT BUSHING	
12	96500-22357	1	OIL SEAL	22*35*7
13	90350-14000G	1	NYLON NUT	M14
14	94201-03450	1	COTTER PIN	3*45
15	44511-169-000	2	BALL JOINT,LEFT THREAD	
16	44521-169-000	2	BALL JOINT,RIGHT THREAD	
17	94001-12000LC	2	HEX NUT	M12
18	91001-12235B	1	ROD	M12*235
19	94001-12000B	2	HEX NUT	M12
20	94101-1020020	4	PLAIN WASHER	10*20*2
21	94051-10000G	4	SCOTCH NUT	M10
22	94201-03320	4	COTTER PIN	3*32
23	96421-169-000	1	RUBBER CAP	
24	37200-223-000	1	SPEEDOMETER ASS'Y(Digital)	12V 夜燈
25	37218-223-000	1	SENSOR	
26	37217-223-000	1	MAGNET	圓型
27	93500-03010	2	PAN PHILLIPS BOLT	3*10
28	94101-0306005	2	PLAIN WASHER	
29	94001-03000	2	HEX NUT	3mm
30	93901-05010	1	FLAT HEAD HEX SOCKETBOLT	5*10
31	90351-06000	2	HEX FLANGE LOCK NUT	M6
32	37212-223-000	1	SPEEDOMETER HOLDER	
33	93701-05008	2	PAN FLAT HEAD PHILLIPS BOLT	5*8mm
34	93701-06012G	2	PAN FLAT HEAD PHILLIPS	6*12
35	64211-223-000	1	TRIM. SPEEDOMETER LID	

ARM

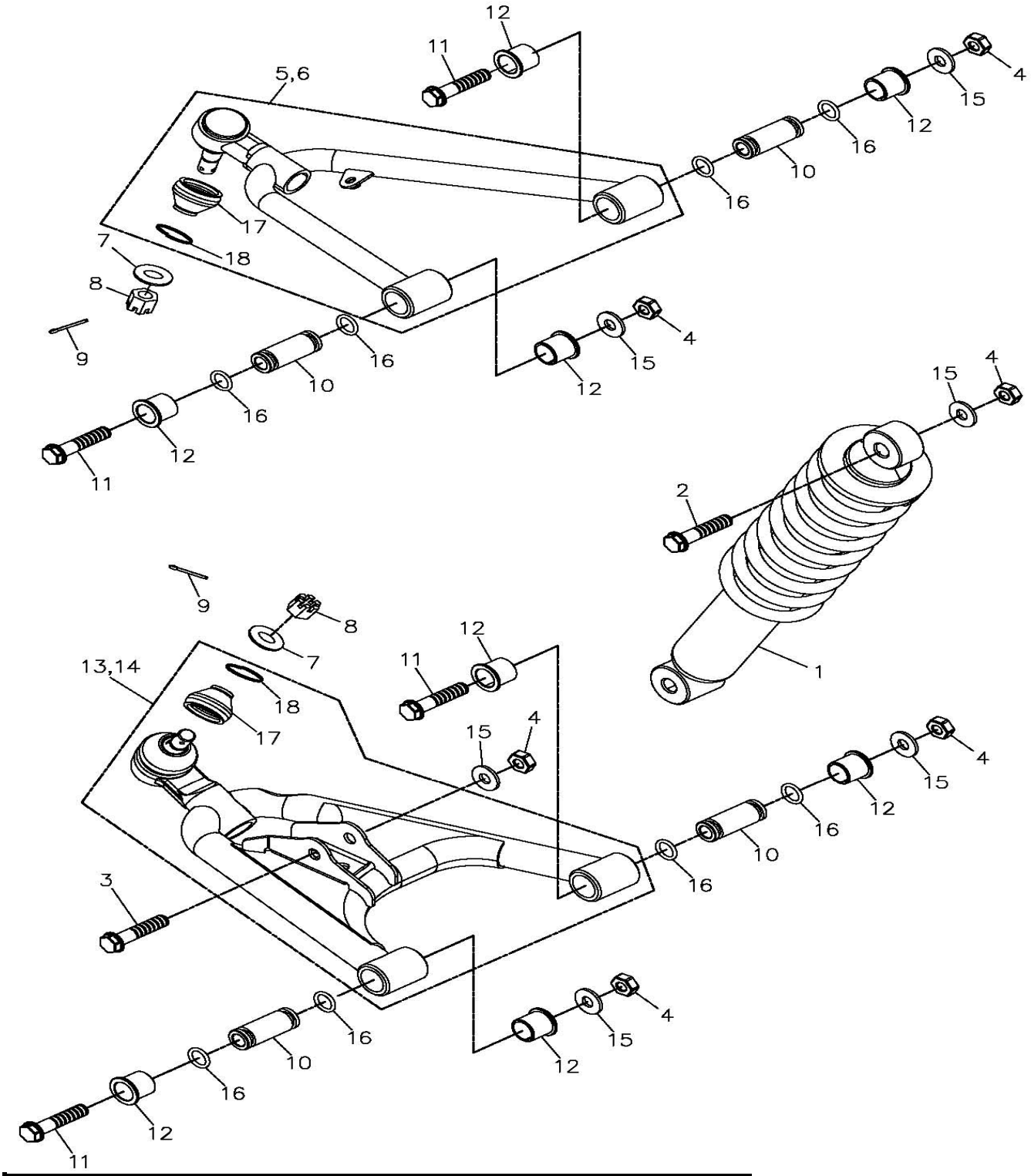

Item No.	Parts No.	Unit Q'ty	Parts Name	
1	51400-169-000	2	FRONT CUSHION ASS`Y	
2	96000-10040-14G	2	HEX FLANGE BOLT	M10*40
3	96000-10055-14G	2	HEX WASHER FACE BOLT	10*55
4	90350-10000G	12	NYLON NUT	M10*P1.25
5	51210-169-000	1	RIGHT UP SUSPENSION ARM	
6	51310-169-000	1	LEFT UP SUSPENSION ARM	
7	94101-1222020	4	PLAIN WASHER	12*22*2

8	94051-12000G	4	SCOTCH NUT	M12
9	94201-03320	4	COTTER PIN	3*32
10	51350-169-000	8	BUSHING	
11	96000-10065-12G	8	HEX WASHER FACE BOLT	10*65
12	51202-169-000	16	BUSH	φ17
13	51610-169-000	1	RIGHT DOWN SUSPENSION ARM	
14	51510-169-000	1	LEFT DOWN SUSPENSION ARM	
15	94101-1020020	10	PLAIN WASHER	10*20*2
16	91312-169-00A	16	O-RING	12.5*2.4
17	51212-169-000	4	DUST SEAT	
18	51219-169-000	4	DUST SEAT SPRING	

FRAME BODY

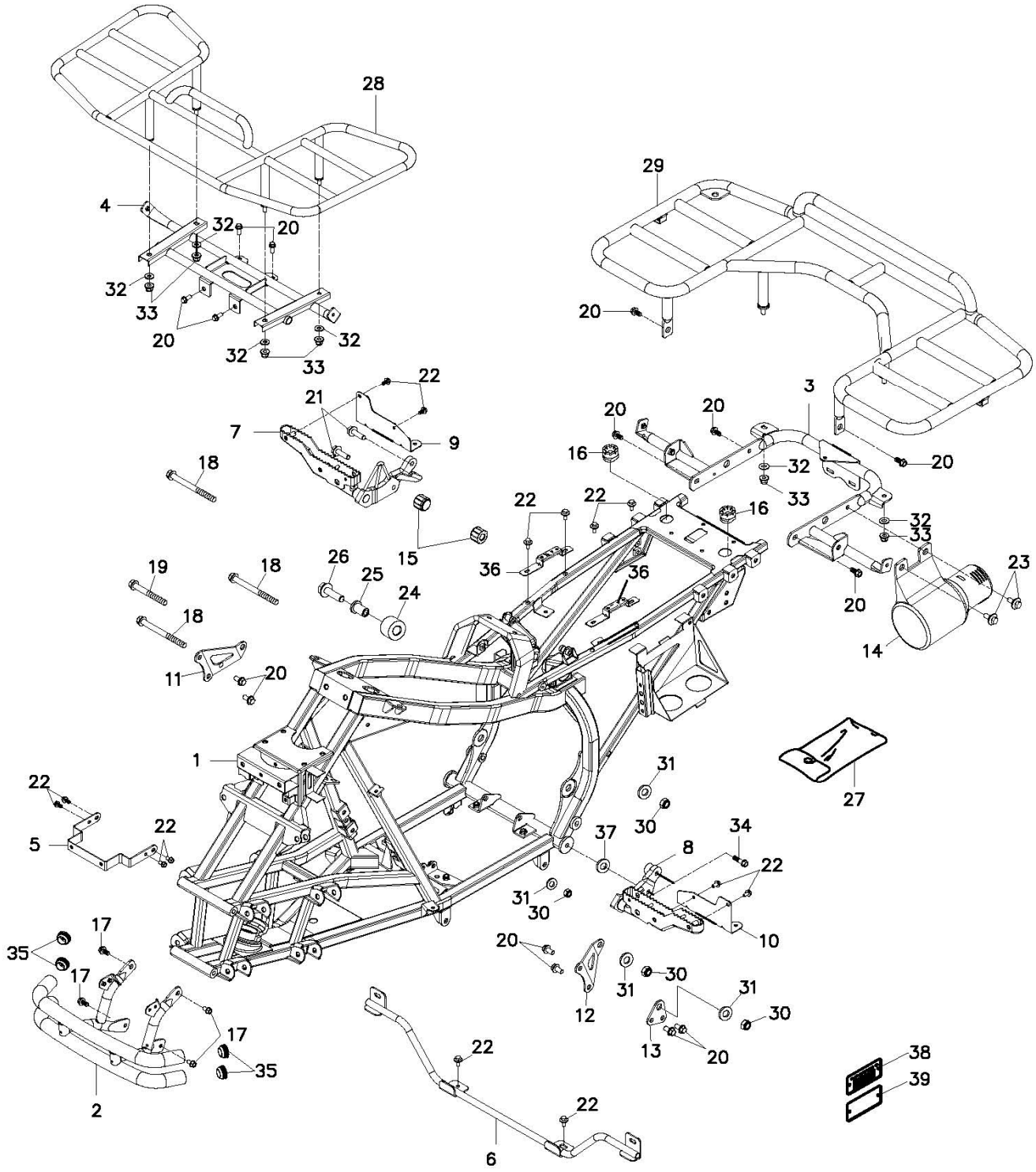

Item No.	Parts No.	Unit Q'ty	Parts Name
1	50100-223-000	1	FRAME COMP
2	50104-223-000	1	FRONT BUMPER
3	50105-223-000	1	REAR BUMPER
4	64309-223-000	1	FRONT COVER FIXED POLE
5	64343-223-000	1	FRONT COVER FIXED POLE
6	64344-223-000	1	FRONT COVER FIXED POLE
7	50717-223-000	1	R.STEP BAR COMP

8	50718-223-000	1	L.STEP BAR COMP	
9	64314-223-000	1	R. FIXED POLE	
10	64315-223-000	1	L. FIXED POLE	
11	50201-169-000	1	R.ENGINE FIXED PLATE	
12	50202-169-000	1	L.ENGINE FIXED PLATE	
13	50206-169-000	1	ENGINE BRACKET	
14	50121-169-000	1	TOOL CASE	
15	77212-169-000	2	RUBBER	
16	77211-145-000	2	RUBBER	
17	96000-10015-14G	4	HEX FLANGE BOLT	M10*15
18	96000-10110-14G	3	HEX FLANGE BOLT	M10*110
19	96000-10080-14G	1	HEX FLANGE BOLT	M10*80
20	96000-08015-12G	15	HEX FLANGE BOLT	M8*15
21	96000-10035-14G	2	HEX FLANGE BOLT	M10*35
22	92000-06014-10K	14	HEX WASHER FACE BOLT	6*15
23	90111-08015-12G	2	LADDER BOLT	8*15
24	52112-169-000	1	CRASHWORTHY RUBBER COVER	
25	52119-169-000	1	CRASHWORTHY RUBBER BUSHING	
26	96000-0803512CL	1	HEX WASHER FACE BOLT	8x35
27	50120-169-000	1	TOOL BAG	
28	61200-223-000	1	FRONT LUGGAGE CARRIER SET	
29	81200-223-000	1	REAR LUGGAGE CARRIER SET	
30	90350-10000G	4	NYLON NUT	M10*P1.25
31	94101-1020020	4	PLAIN WASHER	10*20*2
32	94101-0815020	6	PLAIN WASHER	8*15*2
33	90350-08000G	6	NYLON NUT	M8
34	96000-10048-14G	2	HEX WASHER FACE BOLT	M10*48
35	96421-197-000	4	RUBBER CAP	
36	50228-169-000	2	REAR COVER BRACKER	
37	94101-1020020G	1	PLAIN WASHER	
38	50110-101-000	1	ID PLATE	
39	50133-169-000	1	ID PLATE BRACKER	

SWING ARM SUB ASS'Y

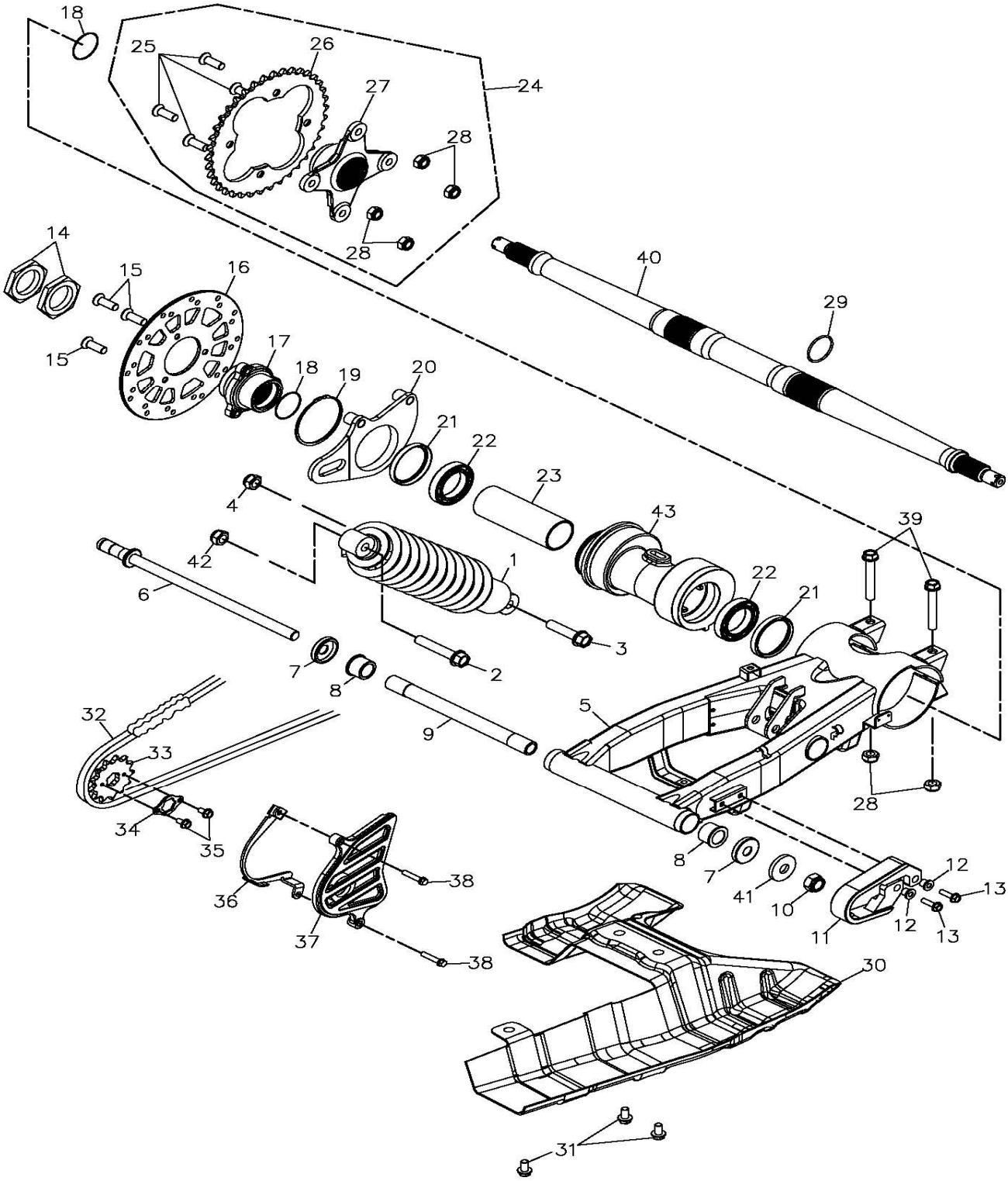

Item No.	Parts No.	Unit Q'ty	Parts Name	
1	52400-169-00B	1	REAR CUSHION ASS'Y	
2	96000-1206517GL	1	HEX FLANGE BOLT	M12*65
3	96000-1205017GL	1	HEX FLANGE BOLT	M12*50
4	90350-12000G	1	NYLON INSERT LOCK NUT	M12
5	52100-169-000	1	SWING ARM SUB ASS'Y	
6	52116-169-000	1	SWING ARM BOLT	
7	52144-145-000	2	SWING ARM SEAL COVER	

8	52103-145-000	2	BUSH	
9	52115-169-000	1	COLLAR	
10	90350-14000G	1	NYLON NUT	M14
11	40533-169-000	1	RUBBER BUSHING	
12	40534-169-000	2	BUSHING	
13	92006-06020-10G	2	HEX FACE BOLT(WASHER)	6*20
14	94001-38080C	2	HEX NUT	M38*8*P1.5
15	93901-08018G	3	HAX SOCKET BOLT	M8*18
16	42105-169-00A	1	REAR BRAKE DISK	直徑200
17	42106-169-000	1	REAR BRAKE PANEL CONNECTOR	
18	91340-169-000	2	O-RING	40*1.3
19	94511-7000S	1	EXTERNAL CIPCLIP	∮70
20	52120-169-000	1	REAR AXLE ADJUSTER BRACKET	
21	52102-169-000	2	O-SEAL	52*62*7/9
22	96100-6908ZZ	2	RADIAL BALL BEARING	6908ZZ/5K
23	52113-169-000	1	REAR AXLE BUSH	
24	42600-169-000	1	REAR SPROCKET ASS'Y	
25	93901-10027G	4	HEX SOCKET FLAT HEAD BOLT	M10*27
26	23802-169-00B	1	DRIVE SPROCKET	32T
27	42610-169-00A	1	REAR SPROCKET FLANGE	
28	90350-10000G	6	NYLON NUT	M10*P1.25
29	42100-169-000	1	EXTERNAL CIRCLIP	40 mm
30	40510-169-000	1	CHAIN PROTECT COVER	
31	96000-08015-12G	3	HEX FLANGE BOLT	M8*15
32	40530-169-00A	1	DRIVE CHAIN ASS'Y	86目
33	23801-169-000	1	DRIVE SPROCKET ASS'Y	13T
34	23811-169-000	1	DRIVE SPROCKET FIXING PLATE	
35	92000-06010-10B	2	HEX BOLT	6*10
36	40516-169-000	1	DRIVE CHAIN GUIDE	
37	40517-169-000	1	FRONT CHAIN PROTECTER	
38	96000-06025-10G	2	HEX WASHER FACE BOLT	M6*25
39	96000-10090-14G	2	HEX FLANGE BOLT	M10*90
40	42301-169-000	1	REAR WHEEL AXLE	
41	94105-1529030	1	PLAIN WASHER	15*29*3
42	94050-12000	1	HEX FLANGE NUT WITH SERRATIC	12mm
43	52200-169-000	1	REAR AXLE HOLDER	

WHEEL FRONT & REAR

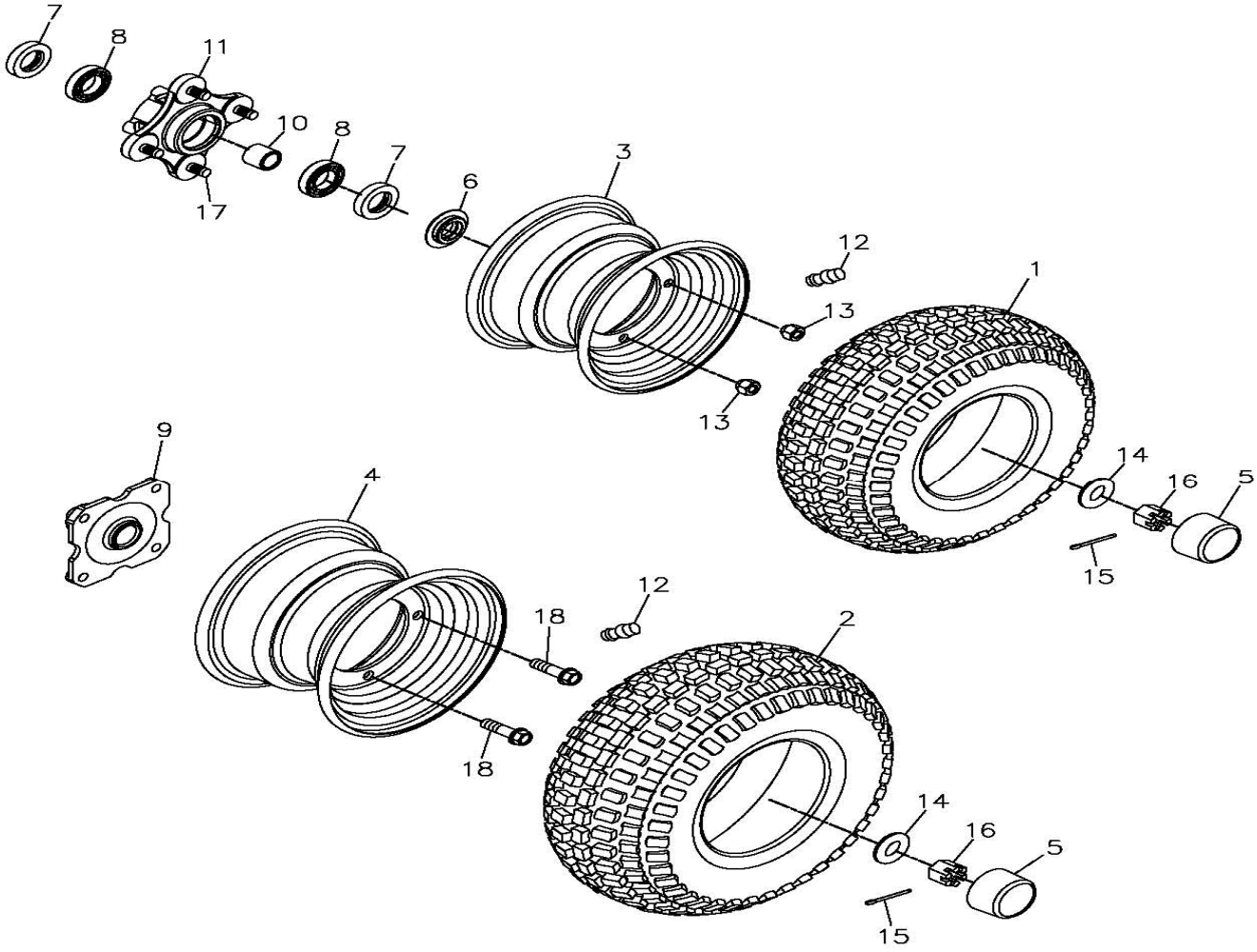

Item No.	Parts No.	Unit Q'ty	Parts Name	
1	42711-169-00B	2	FRONT TIRE	AT21*7-10 546F
2	42811-169-00B	2	REAR TIRE	AT21*10-8 K547
3	42701-169-000	2	FRONT TIRE	10*5.5
4	42801-169-00A	2	REAR RIM	8*8
5	42814-145-000	4	RUBBER COVER	
6	42707-169-000	2	COLLAR	
7	96500-29435	4	OIL SEAL	29.3*43.6*4.5
8	96100-6004ZZ	4	RADIAL BALL BEARING	6004ZZCM/2A-T0
9	42036-145-001	2	SHAFT CONNECTOR (REV.3)	
10	42705-169-000	2	COLLAR	
11	42036-169-000	2	FRONT SHAFT HUB	
12	42616-145-000	4	AIR NOZZLE	
13	94001-10015B	8	WHEEL NUT	M10*15
14	94101-1840045	4	PLATE WASHER	18*40*4.5
15	94201-03320	4	COTTER PIN	3*32
16	94051-18000B	4	SCOTCH NUT	M18
17	96005-10035C	8	HUB STUD BOLT	10*35

18	96000-10020-14	8	HEX WASHER FACE BOLT	10*20

BODY COVER & SEAT

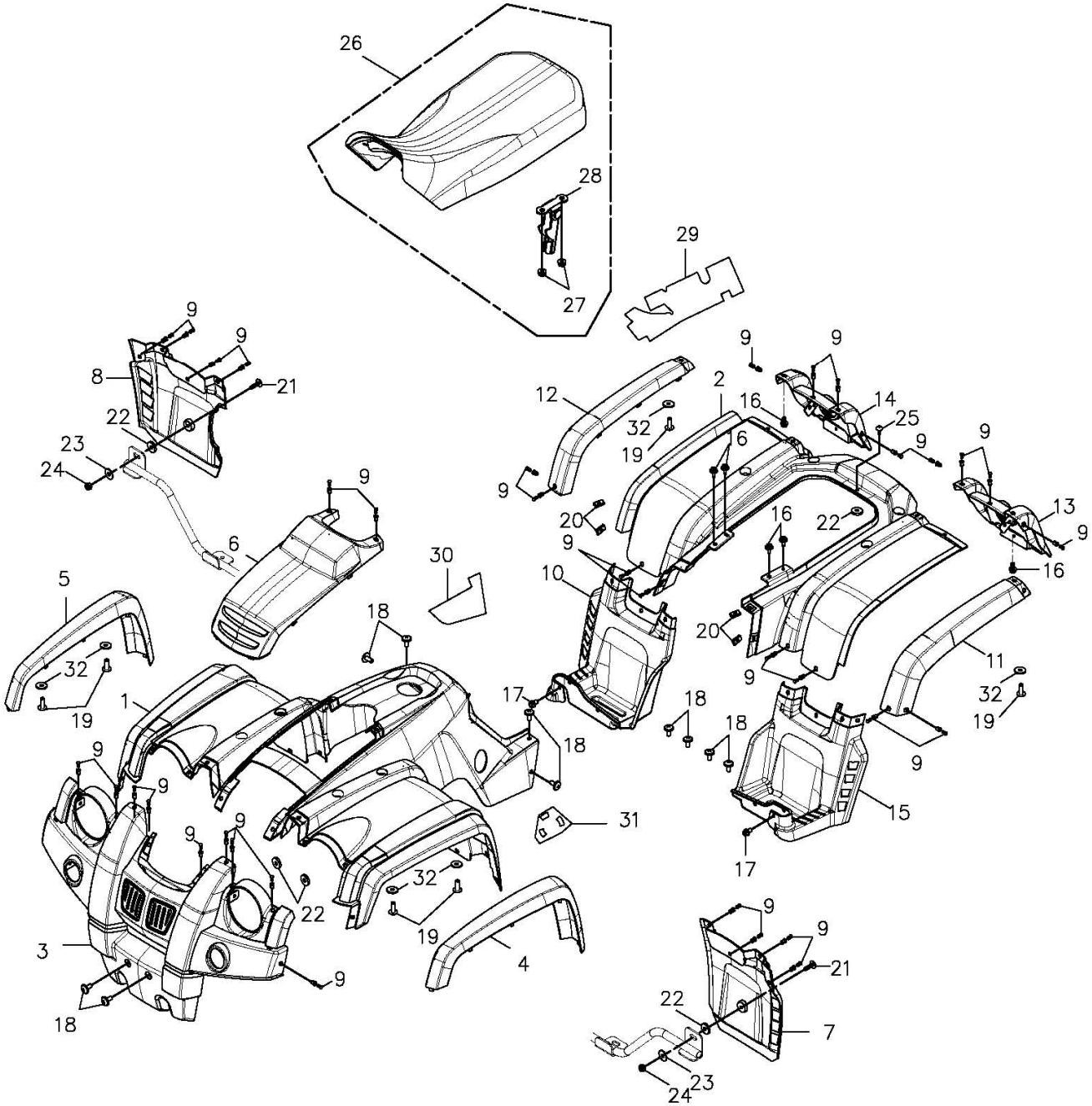

Item No.	Parts No.	Unit Q'ty	Parts Name
1	64301-223-000	1	FRONT COVER
2	83400-223-000	1	REAR COVER
3	50107-223-000	1	BUMPER COVER
4	64223-223-000	1	F.FRONT VISOR
5	64303-223-000	1	R.FRONT VISOR
6	64302-223-000	1	FRONT VISOR
7	61100-223-000	1	L.FRONT FENDER
8	61101-223-000	1	R.FRONT FENDER
9	90663-179-000	38	PLASTIQUE RIVET
10	64312-223-000	1	R. FLOOR PANEL
11	83600-223-000	1	LEFT REAR COVER

12	83500-223-000	1	RIGHT REAR COVER	
13	80115-223-000	1	L.REAR FENDER	
14	80116-223-000	1	L.REAR FENDER	
15	64313-223-000	1	L. FLOOR PANEL	
16	92000-06014-10G	6	HEX BOLT	6*14
17	96000-06015-10G	2	HEX WASHER FACE BOLT	6*15
18	93800-06015S	6	PAN PHILLIPS BOLT	6*15
19	93903-05012	6	TAPPING SCREW TRUSS HEAD PHIL	5*12
20	90344-0600A	4	U PLATE NUT	6mm
21	93800-06020S	2	PAN PHILPS BOLT	6*20
22	94102-145-000	5	RUBBER WASHER	
23	94101-0618020	2	PLAIN WASHER	6*18*2
24	90350-06000	2	NYLON NUT	6mm
25	93701-06012G	1	PAN FLAT HEAD PHILLIPS	6*12
26	77200-223-000	1	SEAT ASS'Y	
27	94050-06000	2	HEX FLANGE NUT WITH SERRATIO	6mm
28	77201-169-000	1	SEAT BRACKET	
29	83407-223-000	1	REAR COVER ISOLATION GASKET	0.1+3MM/200℃
30	64345-223-000	1	FORNT COVER ISOLATION GASKET	0.1+3MM/200℃
31	87728-197-000	1	INDICATOR STICKER	
32	94101-0514010	6	PLAIN WASHER	5*14*1

BRAKE CALIPER

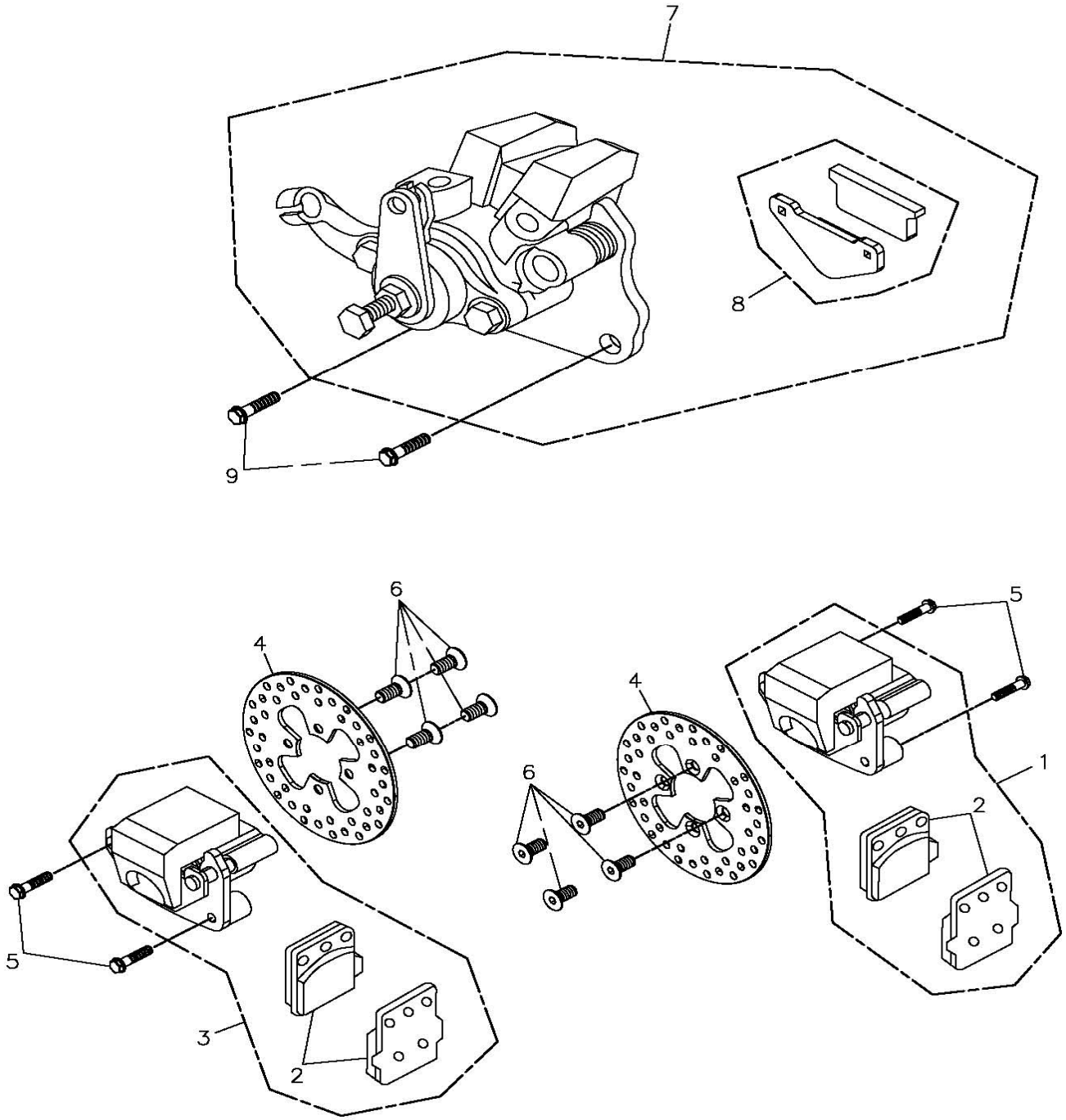

Item No.	Parts No.	Unit Q'ty	Parts Name	
1	45000-169-000	1	R. FRONT BRAKE CALIPER ASS'Y	
2	45120-169-000	2	FRONT BRAKE PAD KIT	
3	45200-169-000	1	L. FRONT BRAKE CALIPER ASS'Y	
4	45015-169-000	2	BRAKE DISC	直徑164
5	96000-0802012GL	4	HEX FLANGE BOLT	M8*20
6	93901-08018G	8	HAX SOCKET BOLT	M8*18
7	43000-169-00B	1	REAR BRAKE CALIPER ASS'Y	
8	43120-169-00B	1	BRAKE PAD KIT	
9	96000-10028-14G	2	HEX WASHER FACE BOLT	10*28

BRAKE SYSTEM

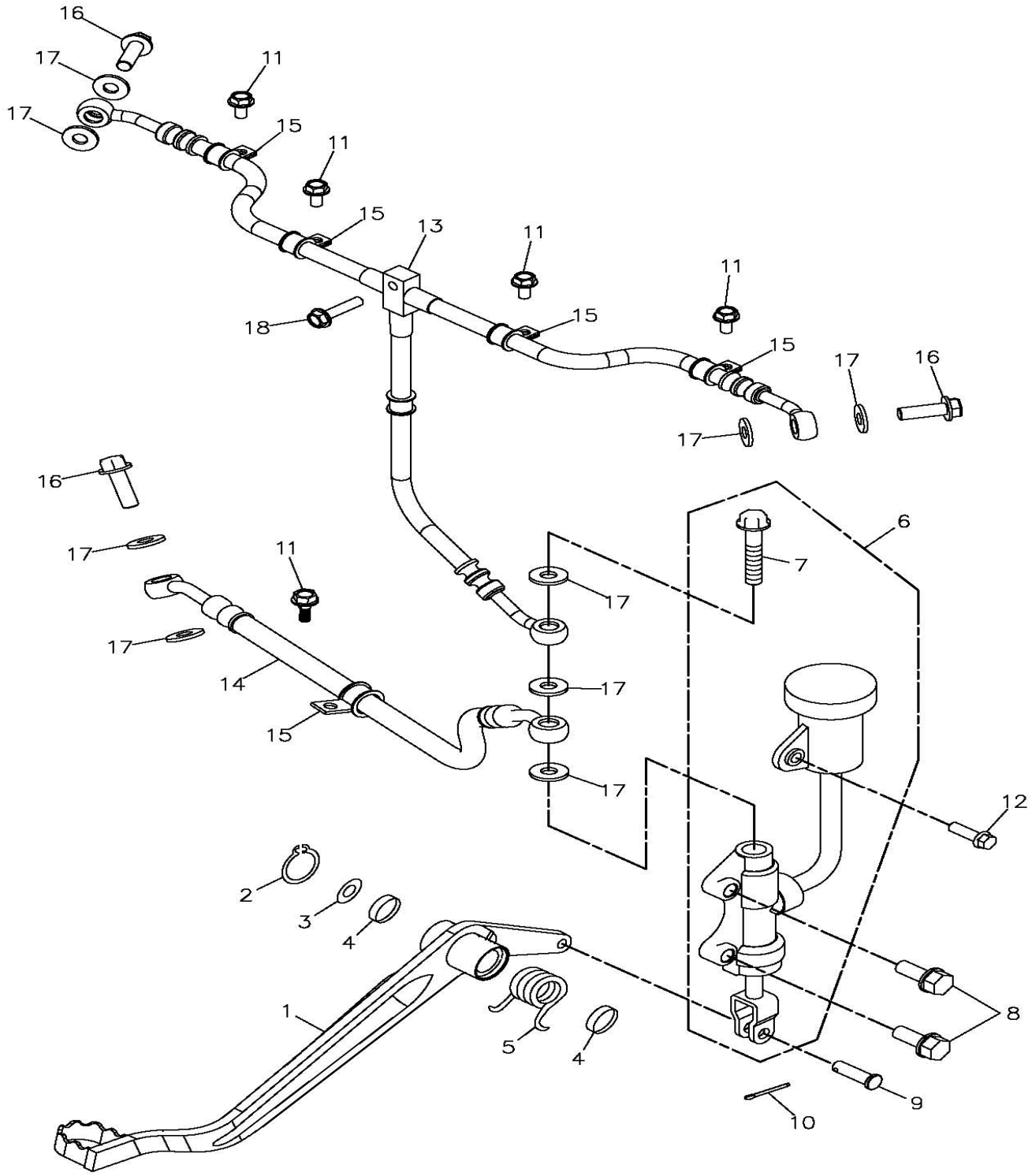

Item No.	Parts No.	Unit Q'ty	Parts Name	
1	46500-169-000	1	BRAKE PEDAL COMP	
2	94511-1700S	1	EXTERNAL CIRCLIP	STW-17
3	94101-1731023	1	PLAIN WASHER	17.6*31*2.3
4	91316-169-000	2	OIL RING	16.7*3.2
5	46501-169-000	1	RETURN SPRING	
6	43500-197-00A	1	REAR MASTER CYLINDER SUB ASS'Y	
7	43501-197-000	1	OIL TUBE FIXING BOLT	10*35

8	96000-08025-12G	2	HEX FLANGE BOLT	M8*25
9	45605-169-000	1	FIX PIN	
10	94201-02200	1	COTTER PIN	2*20
11	96000-06012-10G	5	HEX WASHER FACE BOLT	6*12
12	96000-06015-10G	1	HEX WASHER FACE BOLT	6*15
13	45450-169-00A	1	BACK HOSE	
14	43460-169-000	1	REAR BRAKE HOSE	
15	45452-197-000	5	BRAKE HOSE CLAMP	
16	45456-107-000	3	BRAKE HOSE HEX BOLT	10*22
17	94103-1015010	9	COPPER PLAIN WASHER	10.2*15*1
18	96000-06020-10G	1	HEX FLANGE BOLT	M6*20

BATTERY & MAIN WIRE WARNESS ASS'Y

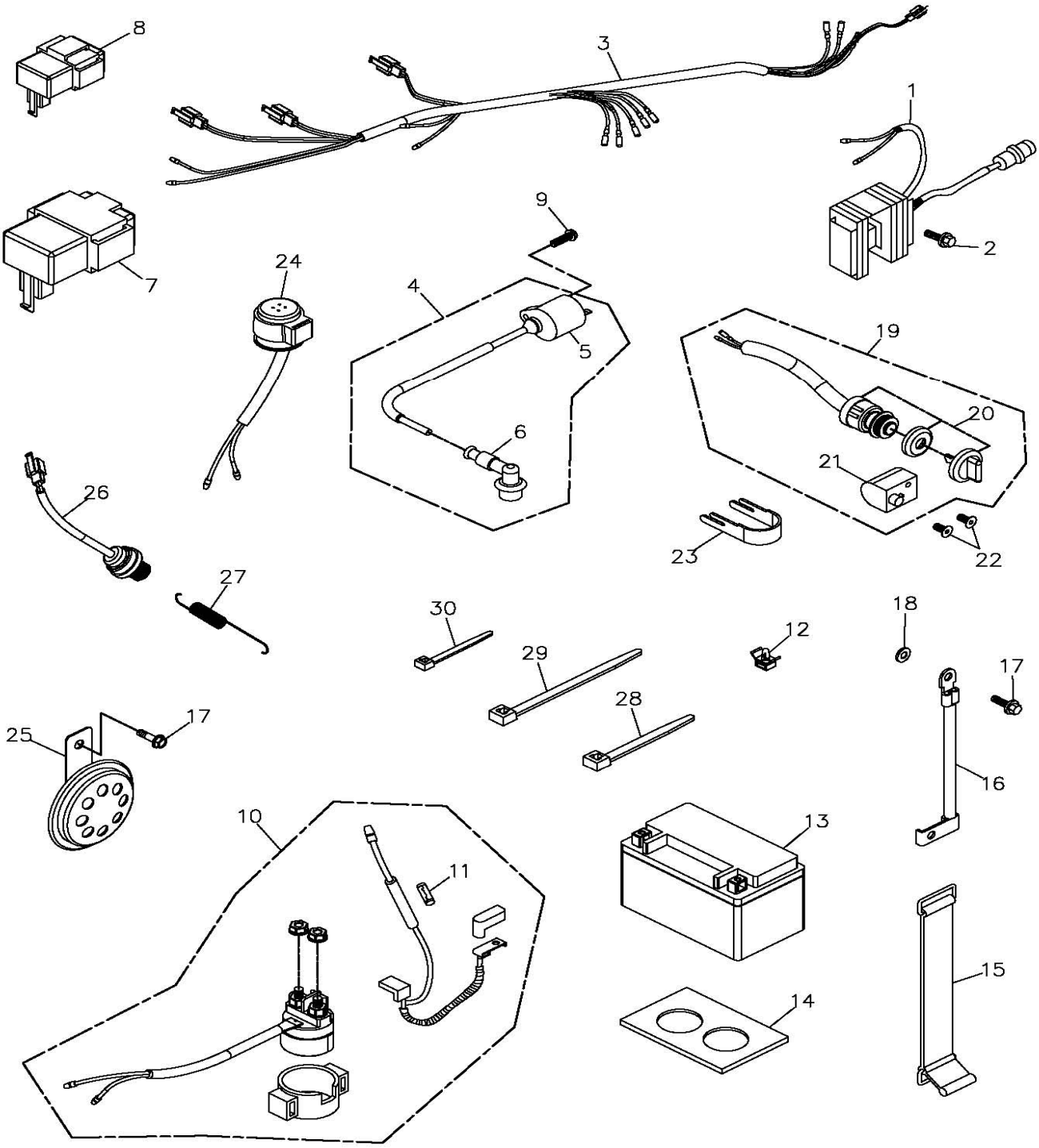

Item No.	Parts No.	Unit Q'ty	Parts Name	
1	31600-169-000	1	REGULATER RECTIFIER	
2	96000-06015-10G	2	HEX WASHER FACE BOLT	6*15
3	32100-223-00A	1	MAIN WIRE HARNESS(92/61)	
4	30500-169-000	1	IGNITTION COIL ASS'Y	
5	30510-169-000	1	HIGH TENSION COIL	
6	30700-169-000	1	SPANK PLUG CAP	
7	30410-169-000	1	C.D.I UNIT	
8	32203-169-000	1	GEAR CHANGE CONTROL UNIT	

9	96000-05022-08G	1	HEX FLANGE BOLT	M5*22
10	32101-169-000	1	STARTING MOTOR WIRE HARNESS ASS'Y	
11	98200-169-000	1	FUSE	20A
12	90801-179-000	8	MOUNT DART	
13	31500-169-000	1	BATTERY	WP9-B
14	30003-169-000	1	RUBBER PAD	
15	31520-169-000	1	BATTERY STRIP	
16	32103-169-000	1	GROUND WIRE	
17	96000-06010-10G	2	HEX FLANGE BOLT	M6*10
18	94115-0611006	1	EXT. TOOTHED LOCK WASHER	6*11*0.6
19	35010-169-00A	1	KEY SET	
20	35100-169-000	1	MAIN SWITCH ASS'Y	
21	53600-154-000	1	STEERING HANDLE LOCK (REV.1)	
22	93902-06012	2	FLAT HEAD PHILLIPS BOLT	6*12
23	35102-145-000	1	MAIN SWITCH BRACKET	
24	38301-223-000	1	FLASHER RELAY	12V
25	38110-101-001	1	HORN (E-MARK)	12V NO0037
26	35350-108-000	1	STOP SWITCH ASS'Y	
27	35357-197-000	1	STOP SWITCH SPRING	
28	90669-101-000	19	STRAP	4.8*200 m/m
29	90669-101-00A	1	ZIP TIE	4.8*250m/m
30	90669-168-000	1	STRAP	3*150 m/m

FUEL TANK & CARBURETOR

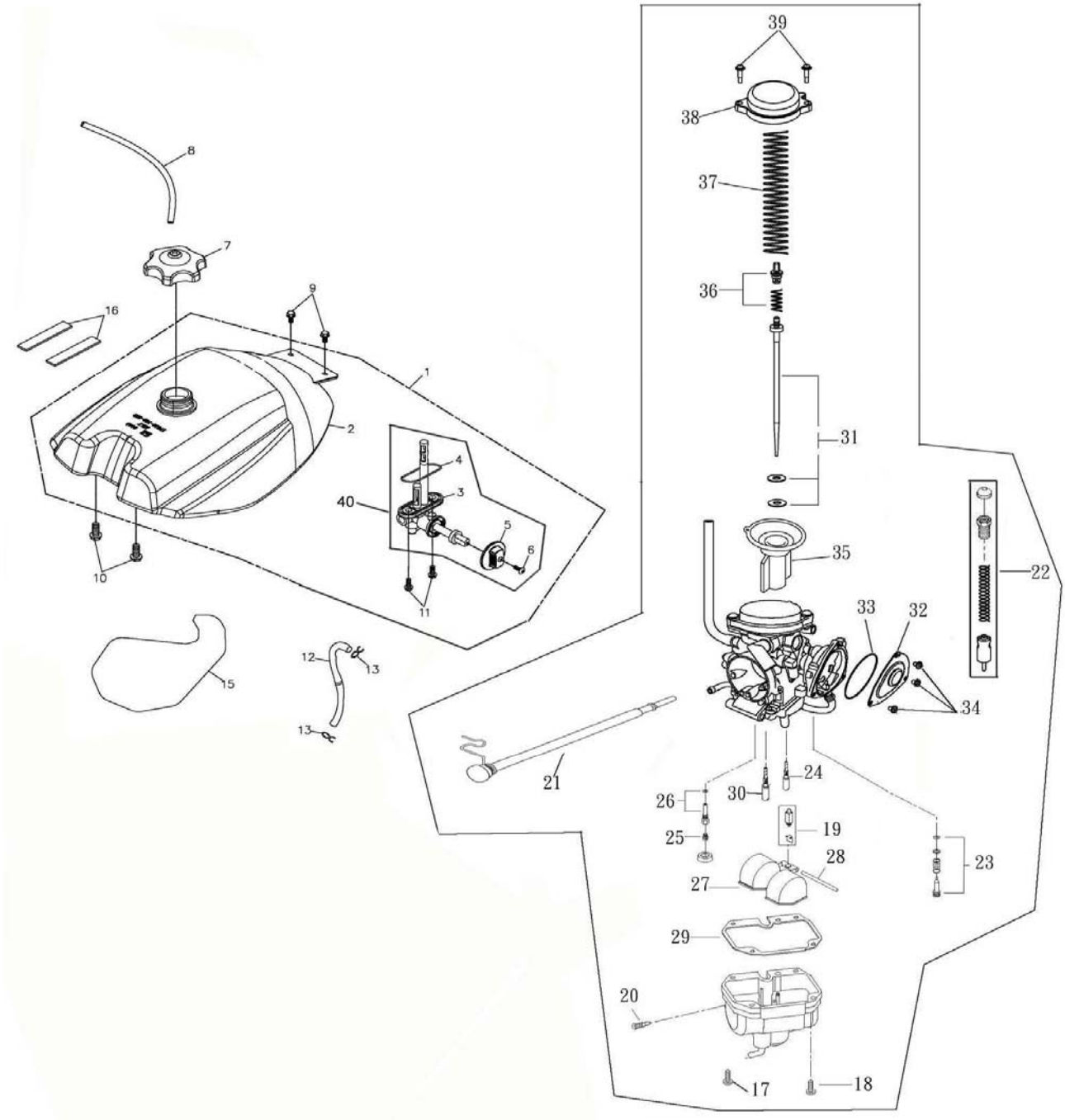

Item No.	Parts No.	Unit Q'ty	Parts Name	
1	17511-169-000	1	FUEL TANK ASS'Y	
2	17500-169-000	1	FUEL TANK COMP	
3	16953-169-00A	1	FUEL CAP BODY	
4	16951-169-000	1	FUEL CUP RING	
5	17622-145-000	1	FUEL VALVE KNOB	
6	93500-04012	1	PAN PHILLIPS BOLT	4*12
7	17620-169-00A	1	FUEL CAP ASS'Y	
8	94400-0408355	1	BREATHER HOSE	4.5*8*355
9	92006-06014-10G	2	HEX BOLT	6*14
10	96000-08012-12G	2	HEX WASHER FACE BOLT	8*12

11	96000-06015-10G	2	HEX WASHER FACE BOLT	6*15
12	94400-0510210	1	FUEL TUBE	5.3*10.5*210
13	94513-09000	2	SPRING CLAMP	
14	16100-169-000	1	CARBURETOR ASS'Y	
15	55101-169-000	1	OIL TANK ISOLATION GASKET	
16	17505-145-000	2	SPONGE PAD	15*100*4
17	93500-04010	3	PAN PHILLIPS BOLT	4*10
18	93502-04012	1	PAN PHILLIPS BOLT	4*12
19	16117-169-000	1	NEEDLE VALVE ASS'Y	#1.5
20	16111-169-000	1	OIL RELEASE SCREW	
21	16114-169-000	1	THROTTLE SCREW SET	
22	17215-169-000	1	MANUAL CHOKE	
23	16115-169-000	1	AIR ADJUST SCREW SET	
24	16110-169-000	1	PILOT JET	#42.5
25	16108-169-000	1	MAIN NOZZLE	#130
26	16154-169-000	1	HOLDER COMP.	
27	16118-169-000	1	FLOAT	
28	16119-169-000	1	FLOAT PIN	
29	16106-169-000	1	FLOAT CHAMBER GASKET	
30	16105-169-000	1	NEEDLE NOZZLE	E-3
31	16104-169-000	1	NEEDLE SET	
32	16152-169-000	1	COVER	
33	16153-169-000	1	COVER O-RING	
34	93500-04006	3	PAN PHILLIPS BOLT	4*6
35	16103-169-000	1	THROTTLE VALVE	
36	16037-169-000	1	VALVE PLATE SET	
37	16102-169-000	1	THROTTLE VALVE SPRING	
38	16124-169-000	1	TOP COVER	
39	16155-169-000	2	TOP COVER BOLT	
40	16950-169-00A	1	FUEL CAP ASS'Y	

AIR-CLEANER & SECONDARY OIL TANK

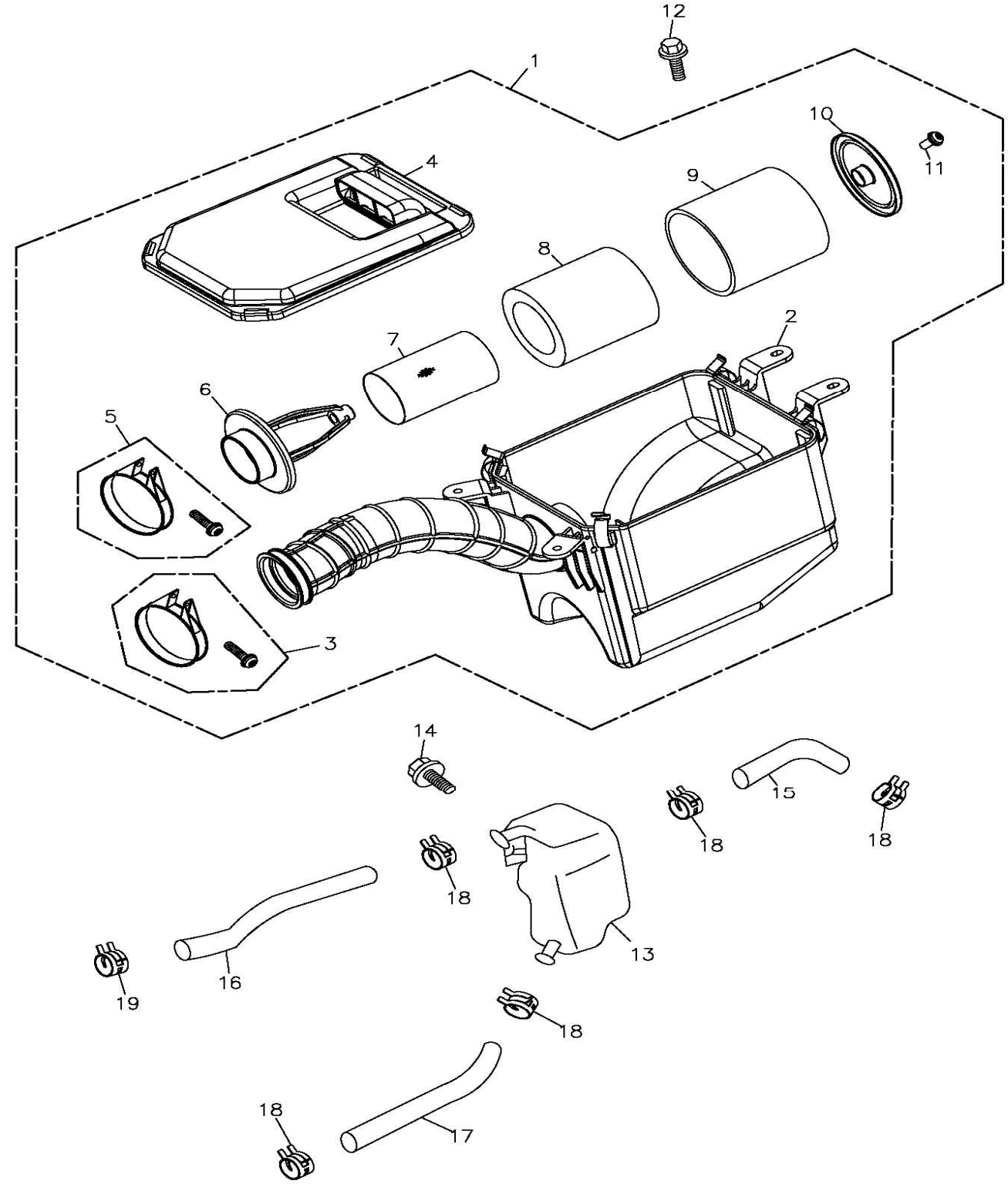

Item No.	Parts No.	Unit Q'ty	Parts Name
1	17200-169-000	1	AIR CLEANER ASS'Y
2	17206-169-000	1	AIR CLEANER CASE
3	17254-169-000	1	CLIP
4	17207-169-000	1	CLEANER CASE CAP
5	17255-169-000	1	CLIP
6	17260-169-000	1	BODY COMP
7	17261-169-000	1	CLEANER FILTER NET

8	17205-169-000	1	AIR CLEANER ELEMENT A	
9	17262-169-000	1	AIR CLEANER ELEMENT B	
10	17263-169-000	1	ELEMENT COVER	
11	93500-05016K	1	PAN PHILLIPS BOLT	M5*16
12	90111-06011-10G	4	LADDER BOLT	6*11*6
13	55110-169-000	1	SECONDARY OIL TANK	
14	96000-06012-10G	1	HEX WASHER FACE BOLT	6*12
15	55113-169-000	1	TUBE	L=80
16	55112-169-000	1	TUBE	L=240
17	55111-169-000	1	TUBE	L=170
18	94513-16000	5	SPRING CLAMP	16mm
19	94513-18000	1	SPRING CLAMP	18mm

MUFFLER

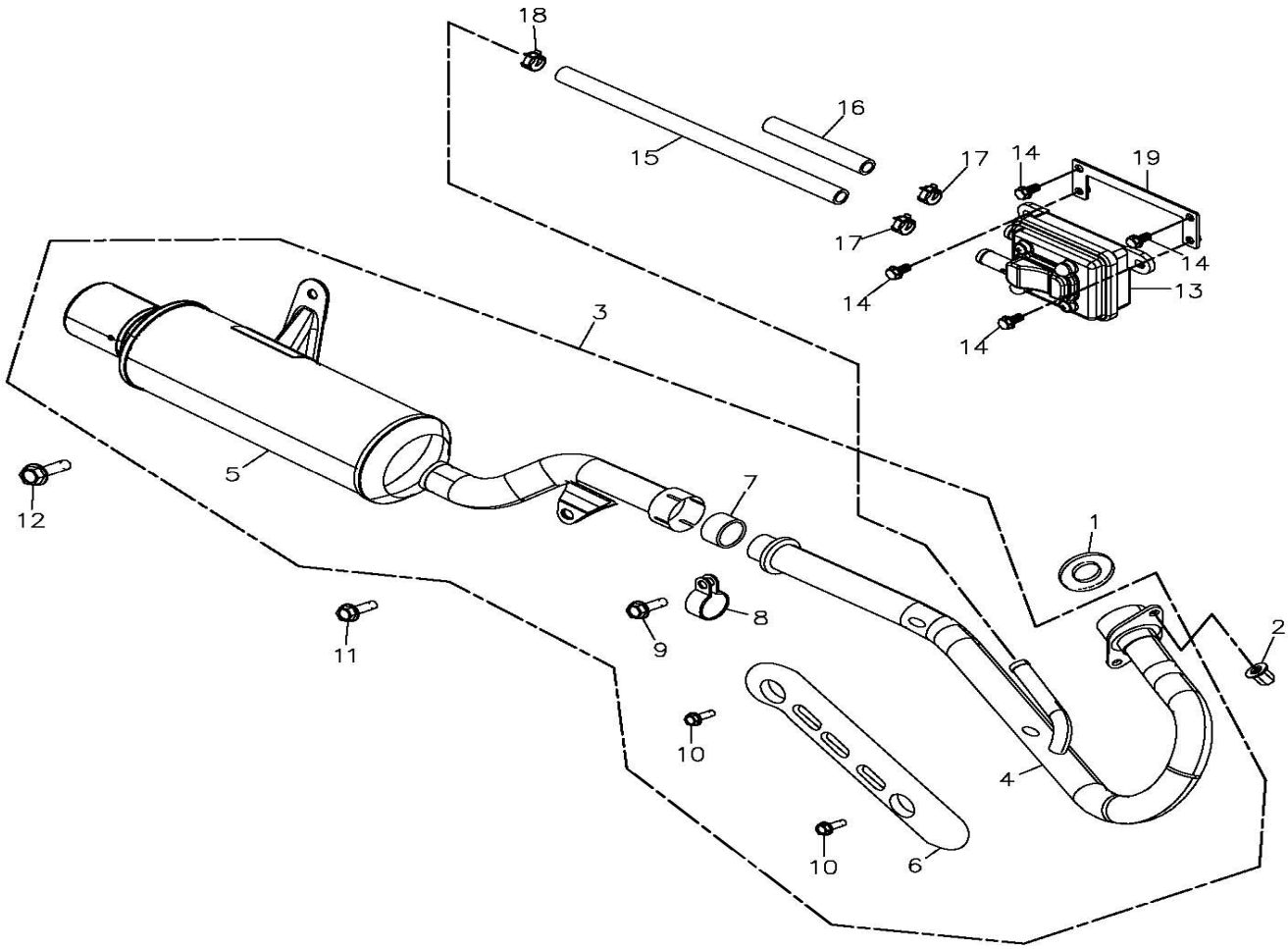

Item No.	Parts No.	Unit Q'ty	Parts Name	
1	18291-169-000	1	EXHAUST PIPE GASKET	
2	90301-08000	2	NUT CAP	8mm
3	18300-169-00B	1	EXHAUST PIPE ASS'Y	
4	18311-169-00B	1	EXHAUST PIPE OF FRONT SECTION	
5	18321-169-00B	1	SILENCER MUFFLER	
6	18318-169-000	1	MUFFLER SHROUD	
7	18308-169-000	1	PIPE GASKET	
8	18302-169-000	1	EXHAUST CLIP	
9	96000-06030-10G	1	HEX FLANGE BOLT	M6*30
10	96000-06010-08B	2	HEX FLANGE BOLT	6*10
11	96000-08015-12G	1	HEX FLANGE BOLT	M8*15
12	96000-10020-14G	2	HEX WASHER FACE BOLT	10*20
13	17410-116-000	1	REED VALVE COMP	
14	96000-06015-10G	2	HEX WASHER FACE BOLT	6*15
15	17412-169-000	1	REED VALVE COMP EX. PIPE	L=990
16	17411-169-000	1	REED VALVE COMP IN. PIPE	L=100
17	94513-18000	2	SPRING CLAMP	18mm
18	94513-16000	1	SPRING CLAMP	16mm

19	54519-169-000	1	REED VALVE COMP PLATE

SIGNAL LIGHT, TAIL LIGHT

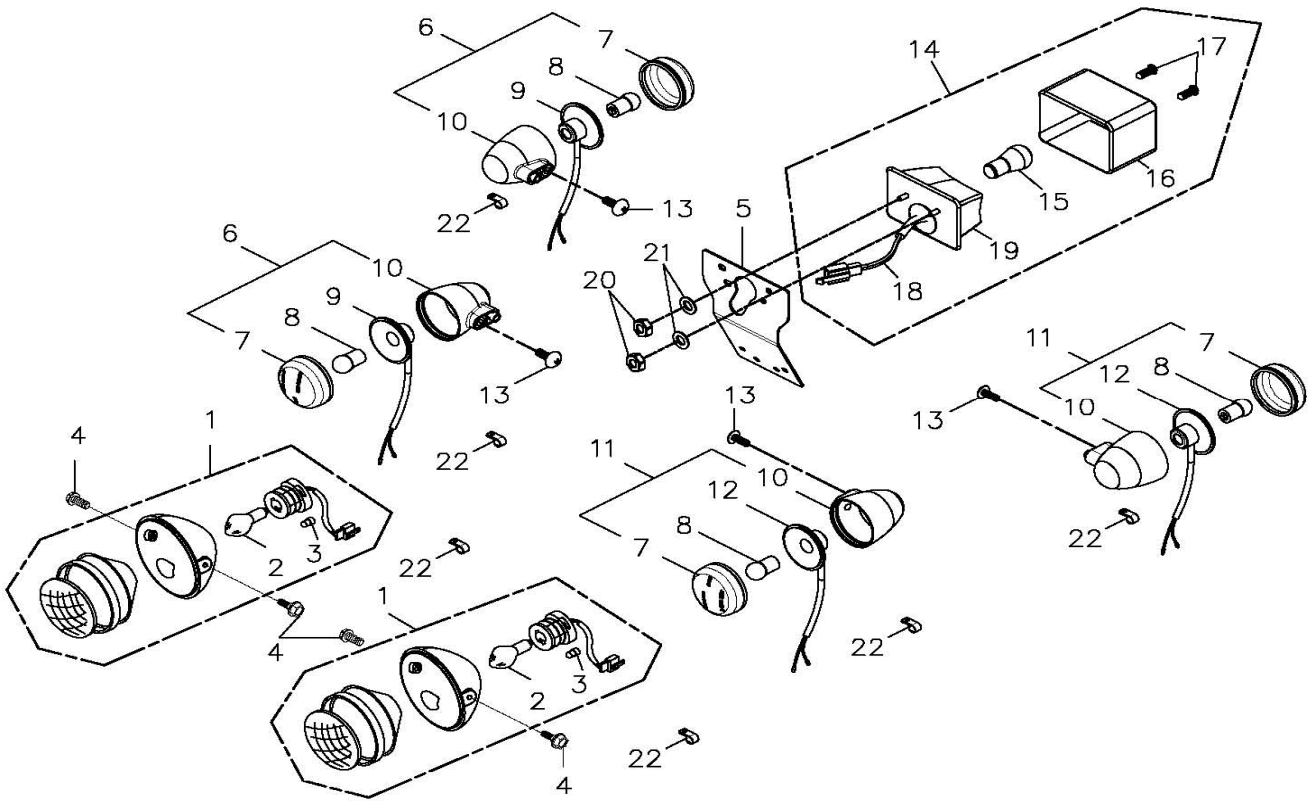

Item No.	Parts No.	Unit Q'ty	Parts Name	
1	33100-169-000	2	HEAD LAMP	
2	34901-169-000	2	HEAD LIGHT BULB	
3	34909-169-000	2	POSITION LAMP	12V5W
4	90111-05015-08G	4	LADDER BOLT	M5*15
5	50357-197-000	1	TAIL LIGHT FIX BRACKET	
6	33400-226-00A	2	R.SIGNAL ASS'Y (E-MARK)	
7	33410-197-000	4	SIGNAL COVER	
8	34905-226-000	4	BULB (E-MARK)	12V/10W
9	33425-226-000	2	SIGNAL BULB SOCKET	
10	33451-223-000	4	SIGNAL SOCKET	
11	33450-226-00A	2	L.SIGNAL ASS'Y(E-MARK)	
12	33435-226-000	2	L.SIGBAL BULB SOCKET	
13	93701-06012G	4	PAN FLAT HEAD PHILLIPS	6*12
14	33700-223-000	1	TAIL LIGHT ASS'Y	
15	34906-128-000	1	TAIL LIGHT BULB	
16	33702-223-000	1	TAIL LIGHT LENS	
17	93500-04055	2	PAN PHILLIPS BOLT	4*55
18	33712-169-000	1	TAIL LIGHT WIRE	
19	33711-128-001	1	REAR LIGHT SOCKET	
20	90350-06000G	2	NYLON NUT	M6
21	94101-0615010	2	PLAIN WASHER	6.5*15*1
22	11352-145-000	6	CABLE CLAMP	